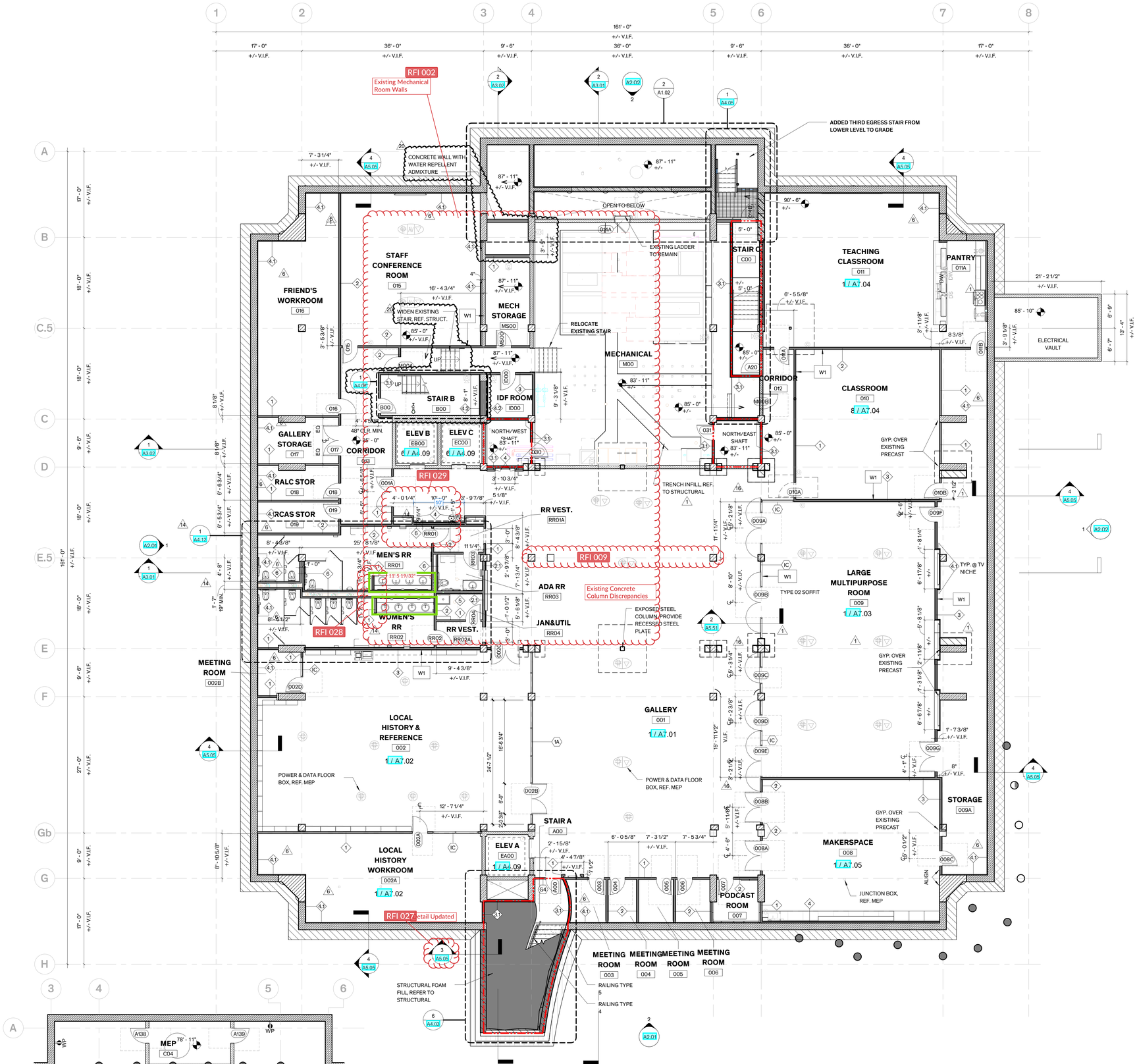

1 Lower Level Floor Plan
1/8" = 1'-0"

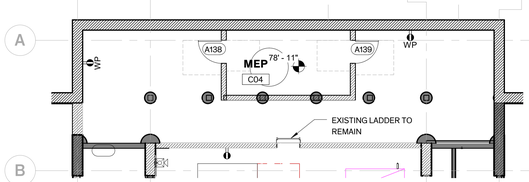

2 Mechanical Mezzanine Floor Plan
1/8" = 1'-0"

RFI 005
All Type 2 Partitions

GENERAL NOTES

FLOOR PLANS
1. DIMENSION TO FACE OF FINISH, UON.
2. "TYP" INDICATES REPEAT, WHEREVER THIS CONDITION OCCURS.

DOORS
1. ALL DOORS ADJACENT TO WALLS ARE GIVEN AS 4" FROM FACE OF JAMB TO FACE OF FINISH AT ADJACENT WALL, UON.

WINDOWS
1. FIELD VERIFY WINDOW DIMENSIONS PRIOR TO INSTALLATION.

FLOORS
1. SEE FINISH PLANS AND SCHEDULES FOR FLOOR FINISHES.

CONDUIT AND DUCTWORK - HORIZONTAL RUNS
1. RUN SURFACE MOUNT CONDUIT TIGHT TO UNDERSIDE OF SLAB ABOVE CEILINGS AND FACE OF BEAMS AND JOISTS .
2. UTILIZE EXISTING OPENINGS IN BEAMS AND JOISTS AT LEVELS 1, 2, AND 3 FOR HORIZONTAL RUNS OF DUCTWORK AND CONDUIT.
3. DUCTWORK AND CONDUIT TO RUN TIGHT TO UNDERSIDE OF BEAMS AND JOISTS ABOVE FINISH CEILINGS AT LOWER LEVEL.
4. GANG CONDUIT TIGHT AND PARALLEL WITH 90 DEGREE BENDS, TYP.

CONDUIT AT PLASTER WALLS
1. SEE DEVICE LAYOUT DIAGRAM ON A0.01 FOR TYP LAYOUT.
2. ELECTRICAL BOXES AND ASSOCIATED ELEMENTS MUST BE RECESSED INTO WALLS SO THAT COVER PLATES AND DEVICES ARE FLUSH WITH THE FINISH SURFACE OF THE WALL.

ELEVATOR
1. PROVIDE NEW ELEVATOR MACHINERY AND CALL BUTTONS AND DOORS FOR ALL (3) ELEVATORS. SEE FINISH PLANS AND SCHEDULES FOR FINISHES IN ELEVATOR CAB.

WALL PARTITION TYPES

REFER TO SHEET A6.21 FOR PARTITION ASSEMBLIES, GENERAL NOTES & DETAILS.

KEYNOTES
W1 PARTITION TO EXTEND TO THE UNDERSIDE OF EXISTING STRUCTURE, AND SEALED ACOUSTICALLY TO STRUCTURE SEE A6.21

SPRINKLER SYSTEM

1. THE SPRINKLER SYSTEM IN ALL AREAS OF THE PROJECT WILL BE CONCEALED WITHIN CEILING CONSTRUCTION EXCEPT THE FOLLOWING AREAS:
- THE INCLINED-CEILING AREAS ALONG THE PERIMETER OF THE THIRD LEVEL
  - a. TO SERVE THESE AREAS, THE SPRINKLER LINE TO EACH AREA IS TO PASS THROUGH EXISTING PENETRATIONS IN THE SEPARATING STRUCTURAL CONCRETE BEAM.
  - b. ONCE ON THE EXTERIOR SIDE OF THE SEPARATING CONCRETE BEAM, THE SPRINKLER LINE CAN RUN HORIZONTALLY WITHIN THE PERIMETER SPACE.
  - c. ALL EXPOSED SPRINKLER LINES IN THESE AREAS WILL HAVE SIMPLE 'T' OR 'L' FITTINGS BUT NO EXPOSED MULTIPLE 'T' OR 'L' FITTINGS. IF TRANSITIONS CANNOT BE ACHIEVED WITHOUT THE USE OF MULTIPLE 'T' OR 'L' FITTINGS, WELDED JOINTS SHALL BE USED.
  - d. SPRINKLER HEADS IN THE PERIMETER AREAS ARE TO BE EXPOSED SIDE-DISCHARGE UNITS.
  - e. ALL EXPOSED SPRINKLER PIPES AND FITTINGS ARE TO BE PAINTED A COLOR AS SELECTED BY THE ARCHITECT.
- MECHANICAL/ELECTRICAL/PLUMBING SPACES TO BE EXPOSED SIDE-DISCHARGE UNITS.
- STAIR B AND C CAN BE EXPOSED SIDE-DISCHARGE UNITS.
- THE SPRINKLER SYSTEM IN AREAS WHERE THE SPRINKLER IS REQUIRED TO BE CONCEALED, WILL RUN THROUGH EXISTING OPENINGS IN THE STRUCTURAL BEAMS.
- THE LAYOUT OF THE SPRINKLER LINES THROUGH THE STRUCTURAL BEAMS MUST BE CAREFULLY COORDINATED WITH ALL THE TRADES WHICH NEED TO RUN SYSTEMS THROUGH THE STRUCTURAL BEAMS.
- ALL SPRINKLER HEADS IN CEILINGS ARE TO BE CONCEALED HEADS. ALL COVERS TO BE FINISHED IN WHITE.

DIMENSIONING TO EXISTING CONDITIONS

1. EXISTING CONDITIONS INDICATED ARE OBTAINED FROM AVAILABLE SOURCES (EXISTING DRAWINGS, FIELD SURVEYS, ETC.) AND ARE NOT GUARANTEED TO BE TRUE AND EXACT. CONTRACTOR SHALL FIELD VERIFY

LEGEND

- EXIST'G WALL TO REMAIN
- NEW WALL
- NEW FLOOR STRUCTURE
- NEW FLOOR STRUCTURE
- FLOOR GRILLES
- EXCAVATED AND BACKFILLED AREAS
- 45° EXIST'G DOOR TO REMAIN
- 90° NEW DOOR
- 1-HOUR RATED FIRE PARTITION
- 2-HOUR RATED FIRE PARTITION
- FOUNDATION DRAIN

BELOW GRADE VERTICAL WATERPROOFING SCOPE NOTES

IN THIS AREA OF WORK, EXISTING GRADE IS TO REMAIN AND AN INJECTABLE BELOW GRADE WATER PROOFING IS TO BE INSTALLED THE FULL HEIGHT OF THE BELOW GRADE SECTION OF THE EXISTING CONCRETE FOUNDATION, FROM THE LOWEST POINT TO GRADE LEVEL AS PER MANUFACTURER'S REQUIREMENTS, AND AS PER THE DRAWINGS AND SPECIFICATIONS SECTION 071000.

IN THIS AREA OF WORK, EXISTING GRADE IS TO BE EXCAVATED TO ALLOW FOR THE INSTALLATION OF NEW WATERPROOFING ON EXISTING CONCRETE FOUNDATION AFTER THE DEMOLITION OF ADJACENT WALKWAYS AND LANDSCAPING, INCLUDING BUT NOT LIMITED TO EXCAVATION OF SOIL TO THE BOTTOM OF THE FOUNDATION WALL (DO NOT UNDERMINE), ETC., CLEANING AND PREPARATION OF THE CONCERT FOUNDATION TO BE RECEIVE NEW LIQUID APPLIED WATERPROOFING AND DRAINAGE/PROTECTION BOARD AS PER THE DRAWINGS AND SPECIFICATION SECTION 071416

AFTER THE INSTALLATION OF NEW CONCRETE FOUNDATION AND BEFORE BACK FILLING INSTALL NEW WATERPROOFING ON NEW CONCRETE FOUNDATION INCLUDING BUT NO LIMITED TO CLEANING AND PREPARATION OF THE NEW CONCRETE FOUNDATION TO RECEIVE NEW LIQUID APPLIED WATERPROOFING AS PER MANUFACTURER'S REQUIREMENTS, INSTALL NEW WATERPROOFING, DRAINAGE / PROTECTION BOARD, BACKFILL

Architexas
Dallas I Austin I San Antonio
www.architexas.com
1907 Marilla St.
Second Floor
Dallas, TX 75201
p 214.748.4561

steinberg hart

RICHARDSON TEXAS
RICHARDSON 2021 CITY BOND PROGRAM

Richardson Public Library
RENOVATION PROJECT

900 CIVIC CENTER DRIVE,
RICHARDSON, TX 75080

COPYRIGHT
The Contractor shall verify and be responsible for all dimensions. DO NOT scale the drawing. Any errors or omissions shall be reported to Architexas without delay. The Copyrights to all designs and drawings are the property of Architexas. Reproduction or use for any purpose other than that authorized by Architexas is forbidden.

REVISION HISTORY

1	04/19/2024	ISSUED FOR CONSTRUCTION
6	07/26/2024	PR 11
14	09/27/2024	PR 17
16	10/17/2024	PR 18
20	12/06/2024	PR 22

ISSUED FOR CONSTRUCTION

REGISTERED ARCHITECT DAVID M. CHACE 18326 STATE OF TEXAS
#18326

Architexas No. 2211
Date 05/14/2024

Sheet Name
LOWER LEVEL FLOOR PLAN

Sheet Number
A1.02

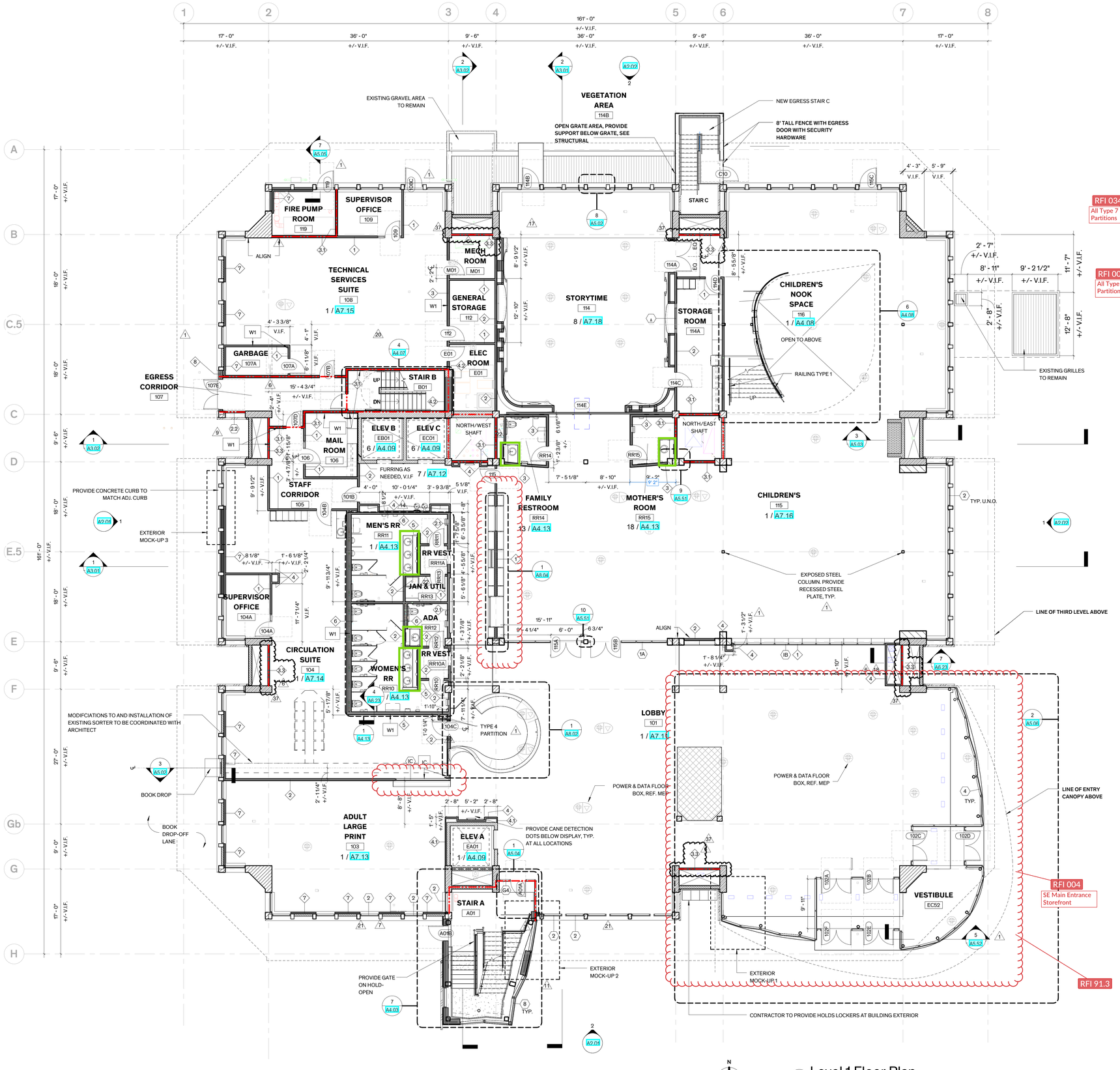

1 Level 1 Floor Plan
1/8" = 1'-0"

GENERAL NOTES

FLOOR PLANS
1. DIMENSION TO FACE OF FINISH, UON.
2. "TYP" INDICATES REPEAT, WHEREVER THIS CONDITION OCCURS.

DOORS
1. ALL DOORS ADJACENT TO WALLS ARE GIVEN AS 4" FROM FACE OF JAMB TO FACE OF FINISH AT ADJACENT WALL, UON.

WINDOWS
1. FIELD VERIFY WINDOW DIMENSIONS PRIOR TO INSTALLATION.

FLOORS
1. SEE FINISH PLANS AND SCHEDULES FOR FLOOR FINISHES.

CONDUIT AND DUCTWORK - HORIZONTAL RUNS
1. RUN SURFACE MOUNT CONDUIT TIGHT TO UNDERSIDE OF SLAB ABOVE CEILINGS AND FACE OF BEAMS AND JOISTS .
2. UTILIZE EXISTING OPENINGS IN BEAMS AND JOISTS AT LEVELS 1, 2, AND 3 FOR HORIZONTAL RUNS OF DUCTWORK AND CONDUIT.
3. DUCTWORK AND CONDUIT TO RUN TIGHT TO UNDERSIDE OF BEAMS AND JOISTS ABOVE FINISH CEILINGS AT LOWER LEVEL.
4. GANG CONDUIT TIGHT AND PARALLEL WITH 90 DEGREE BENDS, TYP.

CONDUIT AT PLASTER WALLS
1. SEE DEVICE LAYOUT DIAGRAM ON A0.01 FOR TYP LAYOUT.
2. ELECTRICAL BOXES AND ASSOCIATED ELEMENTS MUST BE RECESSED INTO WALLS SO THAT COVER PLATES AND DEVICES ARE FLUSH WITH THE FINISH SURFACE OF THE WALL.

ELEVATOR
1. PROVIDE NEW ELEVATOR MACHINERY AND CALL BUTTONS AND DOORS FOR ALL (3) ELEVATORS. SEE FINISH PLANS AND SCHEDULES FOR FINISHES IN ELEVATOR CAB.

WALL PARTITION TYPES

REFER TO SHEET A6.21 FOR PARTITION ASSEMBLIES, GENERAL NOTES & DETAILS.

KEYNOTES
W1 PARTITION TO EXTEND TO THE UNDERSIDE OF EXISTING STRUCTURE, AND SEALED ACOUSTICALLY TO STRUCTURE SEE A6.21

SPRINKLER SYSTEM

1. THE SPRINKLER SYSTEM IN ALL AREAS OF THE PROJECT WILL BE CONCEALED WITHIN CEILING CONSTRUCTION EXCEPT THE FOLLOWING AREAS:
- THE INCLINED-CEILING AREAS ALONG THE PERIMETER OF THE THIRD LEVEL
  - a. TO SERVE THESE AREAS, THE SPRINKLER LINE TO EACH AREA IS TO PASS THROUGH EXISTING PENETRATIONS IN THE SEPARATING STRUCTURAL CONCRETE BEAM.
  - b. ONCE ON THE EXTERIOR SIDE OF THE SEPARATING CONCRETE BEAM, THE SPRINKLER LINE CAN RUN HORIZONTALLY WITHIN THE PERIMETER SPACE.
  - c. ALL EXPOSED SPRINKLER LINES IN THESE AREAS WILL HAVE SIMPLE 'T' OR 'L' FITTINGS BUT NO EXPOSED MULTIPLE 'T' OR 'L' FITTINGS. IF TRANSITIONS CANNOT BE ACHIEVED WITHOUT THE USE OF MULTIPLE 'T' OR 'L' FITTINGS, WELDED JOINTS SHALL BE USED.
  - d. SPRINKLER HEADS IN THE PERIMETER AREAS ARE TO BE EXPOSED SIDE-DISCHARGE UNITS.
  - e. ALL EXPOSED SPRINKLER PIPES AND FITTINGS ARE TO BE PAINTED A COLOR AS SELECTED BY THE ARCHITECT.
- MECHANICAL/ELECTRICAL/PLUMBING SPACES TO BE EXPOSED SIDE-DISCHARGE UNITS.
- STAIR B AND C CAN BE EXPOSED SIDE-DISCHARGE UNITS.
- THE SPRINKLER SYSTEM IN AREAS WHERE THE SPRINKLER IS REQUIRED TO BE CONCEALED, WILL RUN THROUGH EXISTING OPENINGS IN THE STRUCTURAL BEAMS.
- THE LAYOUT OF THE SPRINKLER LINES THROUGH THE STRUCTURAL BEAMS MUST BE CAREFULLY COORDINATED WITH ALL THE TRADES WHICH NEED TO RUN SYSTEMS THROUGH THE STRUCTURAL BEAMS.
- ALL SPRINKLER HEADS IN CEILINGS ARE TO BE CONCEALED HEADS. ALL COVERS TO BE FINISHED IN WHITE.

DIMENSIONING TO EXISTING CONDITIONS

1. EXISTING CONDITIONS INDICATED ARE OBTAINED FROM AVAILABLE SOURCES (EXISTING DRAWINGS, FIELD SURVEYS, ETC.) AND ARE NOT GUARANTEED TO BE TRUE AND EXACT. CONTRACTOR SHALL FIELD VERIFY

LEGEND

- EXIST'G WALL TO REMAIN
- NEW WALL
- NEW FLOOR STRUCTURE
- NEW FLOOR STRUCTURE
- FLOOR GRILLES
- EXCAVATED AND BACKFILLED AREAS
- EXIST'G DOOR TO REMAIN (45°)
- NEW DOOR (90°)
- 1-HOUR RATED FIRE PARTITION
- 2-HOUR RATED FIRE PARTITION
- FOUNDATION DRAIN

Architexas
Dallas I Austin I San Antonio
www.architexas.com
1907 Marilla St.
Second Floor
Dallas, TX 75201
p 214.748.4561

steinberg hart

RICHARDSON TEXAS

RICHARDSON 2021 CITY BOND PROGRAM

Richardson Public Library
RICHARDSON PUBLIC LIBRARY
RENOVATION PROJECT

900 CIVIC CENTER DRIVE,
RICHARDSON, TX 75080

COPYRIGHT
The Contractor shall verify and be responsible for all dimensions. DO NOT scale the drawing. Any errors or omissions shall be reported to Architexas without delay. The Copyrights to all designs and drawings are the property of Architexas. Reproduction or use for any purpose other than that authorized by Architexas is forbidden.

REVISION HISTORY

1	04/19/2024	ISSUED FOR CONSTRUCTION
6	07/26/2024	PR 11
7	08/29/2024	PR 12
9	09/10/2024	PR 13
10	09/13/2024	PR 14
11	10/18/2024	PR 15
14	09/27/2024	PR 17
16	10/17/2024	PR 18
17	11/08/2024	PR 19
18	11/15/2024	PR 20
20	12/06/2024	PR 22
21	12/18/24	PR 12R
22	12/09/24	PR 23
27	01/30/2025	RFI 058.1
37	02/25/2025	RFI 083

ISSUED FOR CONSTRUCTION

REGISTERED ARCHITECT DAVID M. CRASS 18326 STATE OF TEXAS

#18326

Architexas No.	Date
2211	05/14/2024

Sheet Name
FIRST LEVEL FLOOR PLAN

Sheet Number
A1.04

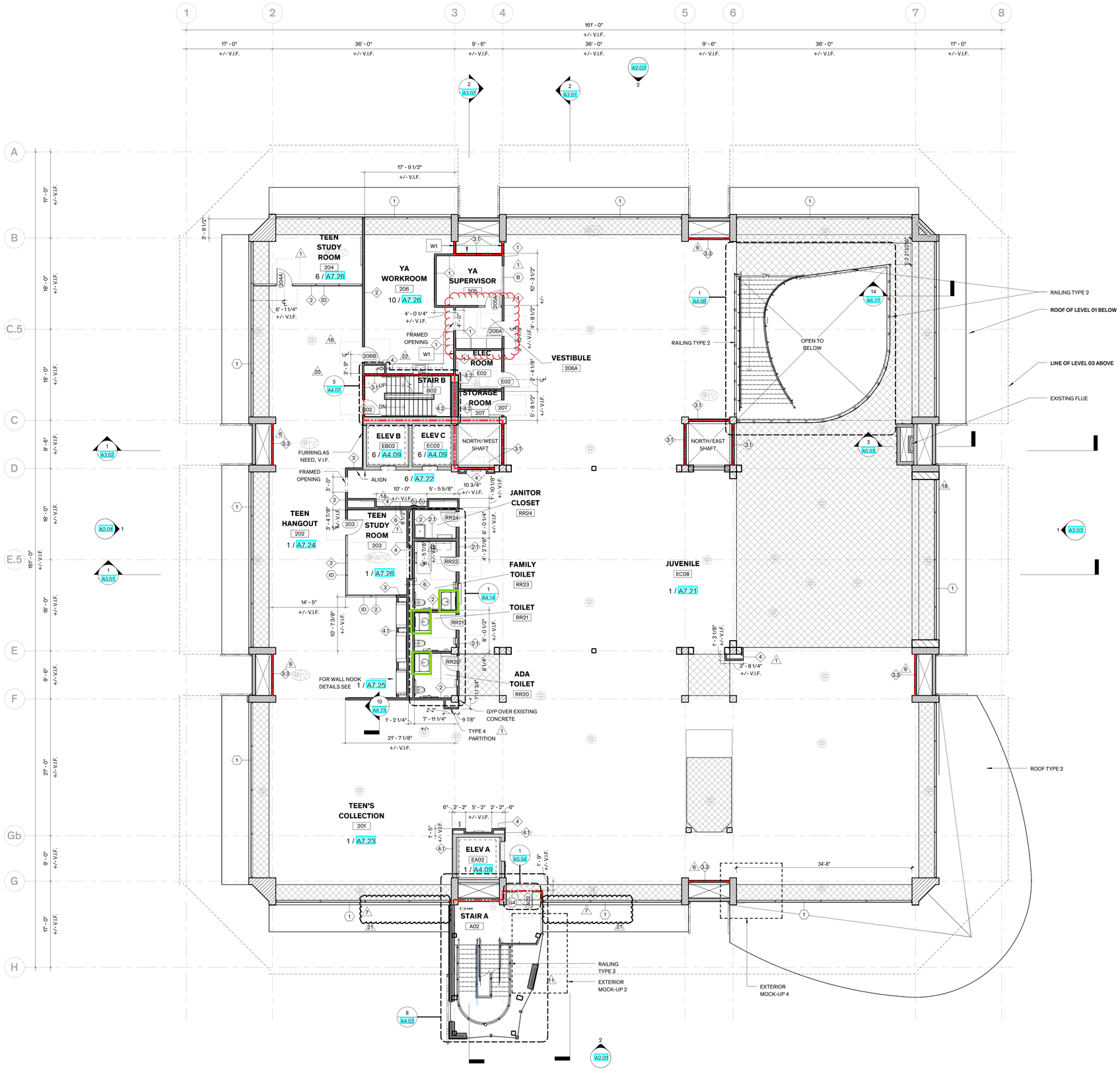

1 Level 2 Floor Plan
1/8" = 1'-0"

GENERAL NOTES

FLOOR PLANS
1. DIMENSION TO FACE OF FINISH, UON.
2. "TYP" INDICATES REPEAT, WHEREVER THIS CONDITION OCCURS.

DOORS
1. ALL DOORS ADJACENT TO WALLS ARE GIVEN AS 4" FROM FACE OF JAMB TO FACE OF FINISH AT ADJACENT WALL, UON.

WINDOWS
1. FIELD VERIFY WINDOW DIMENSIONS PRIOR TO INSTALLATION.

FLOORS
1. SEE FINISH PLANS AND SCHEDULES FOR FLOOR FINISHES.

CONDUIT AND DUCTWORK - HORIZONTAL RUNS
1. RUN SURFACE MOUNT CONDUIT TIGHT TO UNDERSIDE OF SLAB ABOVE CEILINGS AND FACE OF BEAMS AND JOISTS .
2. UTILIZE EXISTING OPENINGS IN BEAMS AND JOISTS AT LEVELS 1, 2, AND 3 FOR HORIZONTAL RUNS OF DUCTWORK AND CONDUIT.
3. DUCTWORK AND CONDUIT TO RUN TIGHT TO UNDERSIDE OF BEAMS AND JOISTS ABOVE FINISH CEILINGS AT LOWER LEVEL.
4. GANG CONDUIT TIGHT AND PARALLEL WITH 90 DEGREE BENDS, TYP.

CONDUIT AT PLASTER WALLS
1. SEE DEVICE LAYOUT DIAGRAM ON A0.01 FOR TYP LAYOUT.
2. ELECTRICAL BOXES AND ASSOCIATED ELEMENTS MUST BE RECESSED INTO WALLS SO THAT COVER PLATES AND DEVICES ARE FLUSH WITH THE FINISH SURFACE OF THE WALL.

ELEVATOR
1. PROVIDE NEW ELEVATOR MACHINERY AND CALL BUTTONS AND DOORS FOR ALL (3) ELEVATORS. SEE FINISH PLANS AND SCHEDULES FOR FINISHES IN ELEVATOR CAB.

RFI 005
All Type 2 Partitions

WALL PARTITION TYPES

REFER TO SHEET A6.21 FOR PARTITION ASSEMBLIES, GENERAL NOTES & DETAILS.

KEYNOTES
W 1 PARTITION TO EXTEND TO THE UNDERSIDE OF EXISTING STRUCTURE, AND SEALED ACOUSTICALLY TO STRUCTURE SEE A6.21

SPRINKLER SYSTEM

1. THE SPRINKLER SYSTEM IN ALL AREAS OF THE PROJECT WILL BE CONCEALED WITHIN CEILING CONSTRUCTION EXCEPT THE FOLLOWING AREAS:
- THE INCLINED-CEILING AREAS ALONG THE PERIMETER OF THE THIRD LEVEL
  - a. TO SERVE THESE AREAS, THE SPRINKLER LINE TO EACH AREA IS TO PASS THROUGH EXISTING PENETRATIONS IN THE SEPARATING STRUCTURAL CONCRETE BEAM.
  - b. ONCE ON THE EXTERIOR SIDE OF THE SEPARATING CONCRETE BEAM, THE SPRINKLER LINE CAN RUN HORIZONTALLY WITHIN THE PERIMETER SPACE.
  - c. ALL EXPOSED SPRINKLER LINES IN THESE AREAS WILL HAVE SIMPLE 'T' OR 'L' FITTINGS BUT NO EXPOSED MULTIPLE 'T' OR 'L' FITTINGS. IF TRANSITIONS CANNOT BE ACHIEVED WITHOUT THE USE OF MULTIPLE 'T' OR 'L' FITTINGS, WELDED JOINTS SHALL BE USED.
  - d. SPRINKLER HEADS IN THE PERIMETER AREAS ARE TO BE EXPOSED SIDE-DISCHARGE UNITS.
  - e. ALL EXPOSED SPRINKLER PIPES AND FITTINGS ARE TO BE PAINTED A COLOR AS SELECTED BY THE ARCHITECT.
- MECHANICAL/ELECTRICAL/PLUMBING SPACES TO BE EXPOSED SIDE-DISCHARGE UNITS.
- STAIR B AND C CAN BE EXPOSED SIDE-DISCHARGE UNITS.
- THE SPRINKLER SYSTEM IN AREAS WHERE THE SPRINKLER IS REQUIRED TO BE CONCEALED, WILL RUN THROUGH EXISTING OPENINGS IN THE STRUCTURAL BEAMS.
- THE LAYOUT OF THE SPRINKLER LINES THROUGH THE STRUCTURAL BEAMS MUST BE CAREFULLY COORDINATED WITH ALL THE TRADES WHICH NEED TO RUN SYSTEMS THROUGH THE STRUCTURAL BEAMS.
- ALL SPRINKLER HEADS IN CEILINGS ARE TO BE CONCEALED HEADS. ALL COVERS TO BE FINISHED IN WHITE.

DIMENSIONING TO EXISTING CONDITIONS

1. EXISTING CONDITIONS INDICATED ARE OBTAINED FROM AVAILABLE SOURCES (EXISTING DRAWINGS, FIELD SURVEYS, ETC.) AND ARE NOT GUARANTEED TO BE TRUE AND EXACT. CONTRACTOR SHALL FIELD VERIFY

LEGEND

- EXIST'G WALL TO REMAIN
- NEW WALL
- NEW FLOOR STRUCTURE
- NEW FLOOR STRUCTURE
- FLOOR GRILLES
- EXCAVATED AND BACKFILLED AREAS
- 45° EXIST'G DOOR TO REMAIN
- 90° NEW DOOR
- 1-HOUR RATED FIRE PARTITION
- 2-HOUR RATED FIRE PARTITION
- FOUNDATION DRAIN

Architexas
Dallas I Austin I San Antonio
www.architexas.com
1907 Marilla St.
Second Floor
Dallas, TX 75201
p 214.748.4561

steinberg hart

RICHARDSON TEXAS

RICHARDSON 2021 CITY BOND PROGRAM

Richardson Public Library
RENOVATION PROJECT

900 CIVIC CENTER DRIVE,
RICHARDSON, TX 75080

COPYRIGHT
The Contractor shall verify and be responsible for all dimensions. DO NOT scale the drawing. Any errors or omissions shall be reported to Architexas without delay. The Copyrights to all designs and drawings are the property of Architexas. Reproduction or use for any purpose other than that authorized by Architexas is forbidden.

REVISION HISTORY

1	04/19/2024	ISSUED FOR CONSTRUCTION
6	07/26/2024	PR 11
7	08/29/2024	PR 12
11	10/18/2024	PR 15
14	09/27/2024	PR 17
16	10/17/2024	PR 18
18	11/15/2024	PR 20
20	12/06/2024	PR 22
21	12/18/24	PR 12R
22	12/09/24	PR 23

ISSUED FOR CONSTRUCTION

REGISTERED ARCHITECT DAVID M. CRAGER 18326 STATE OF TEXAS

#18326

Architexas No. 2211
Date 05/14/2024

Sheet Name
SECOND LEVEL FLOOR PLAN

Sheet Number
A1.06

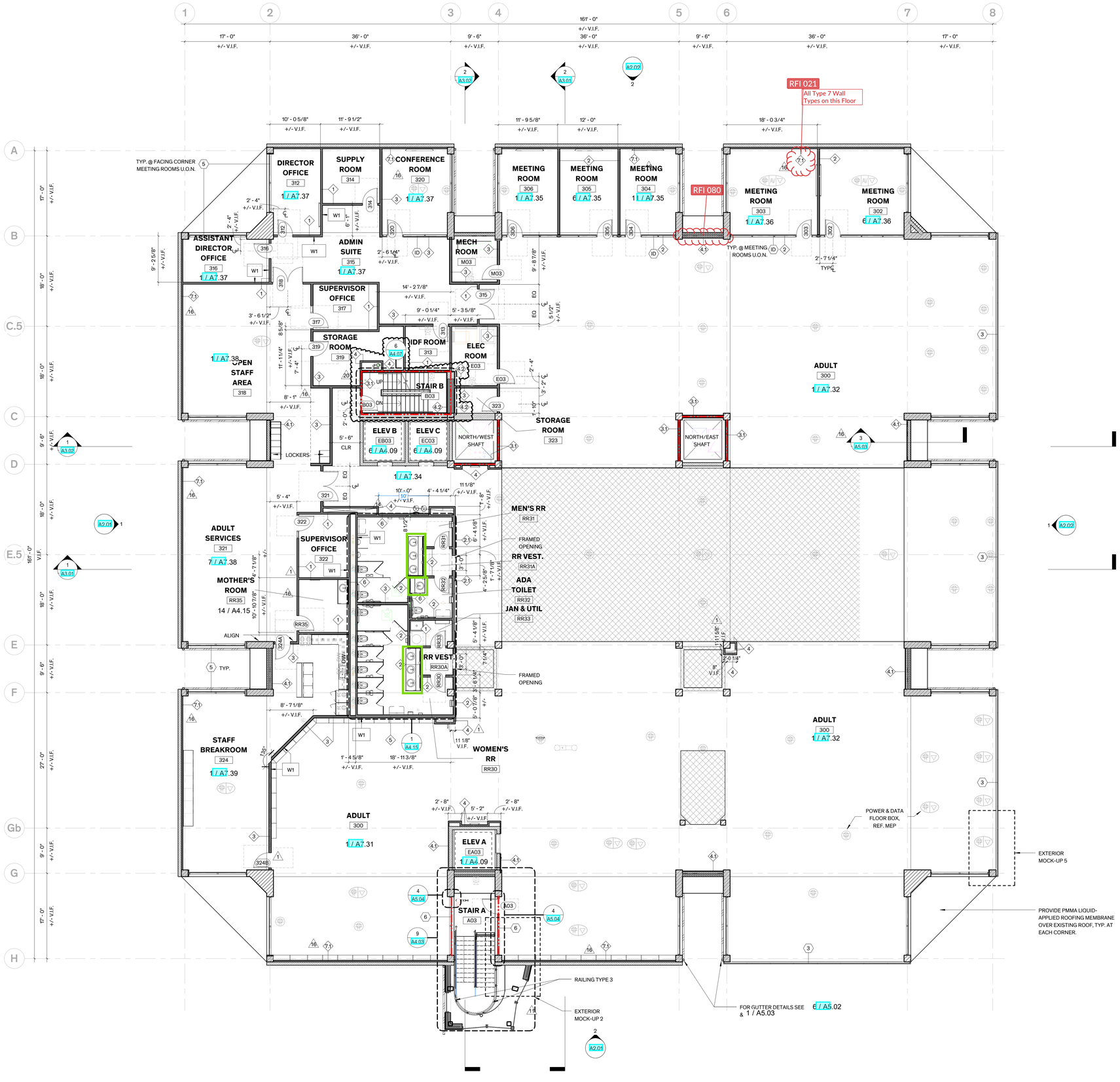

2 Level 3 Floor Plan
1/8" = 1'-0"

GENERAL NOTES

FLOOR PLANS
1. DIMENSION TO FACE OF FINISH, UON.
2. "TYP" INDICATES REPEAT, WHEREVER THIS CONDITION OCCURS.

DOORS
1. ALL DOORS ADJACENT TO WALLS ARE GIVEN AS 4" FROM FACE OF JAMB TO FACE OF FINISH AT ADJACENT WALL, UON.

WINDOWS
1. FIELD VERIFY WINDOW DIMENSIONS PRIOR TO INSTALLATION.

FLOORS
1. SEE FINISH PLANS AND SCHEDULES FOR FLOOR FINISHES.

CONDUIT AND DUCTWORK - HORIZONTAL RUNS
1. RUN SURFACE MOUNT CONDUIT TIGHT TO UNDERSIDE OF SLAB ABOVE CEILINGS AND FACE OF BEAMS AND JOISTS .
2. UTILIZE EXISTING OPENINGS IN BEAMS AND JOISTS AT LEVELS 1, 2, AND 3 FOR HORIZONTAL RUNS OF DUCTWORK AND CONDUIT.
3. DUCTWORK AND CONDUIT TO RUN TIGHT TO UNDERSIDE OF BEAMS AND JOISTS ABOVE FINISH CEILINGS AT LOWER LEVEL.
4. GANG CONDUIT TIGHT AND PARALLEL WITH 90 DEGREE BENDS, TYP.

CONDUIT AT PLASTER WALLS
1. SEE DEVICE LAYOUT DIAGRAM ON A0.01 FOR TYP LAYOUT.
2. ELECTRICAL BOXES AND ASSOCIATED ELEMENTS MUST BE RECESSED INTO WALLS SO THAT COVER PLATES AND DEVICES ARE FLUSH WITH THE FINISH SURFACE OF THE WALL.

ELEVATOR
1. PROVIDE NEW ELEVATOR MACHINERY AND CALL BUTTONS AND DOORS FOR ALL (3) ELEVATORS. SEE FINISH PLANS AND SCHEDULES FOR FINISHES IN ELEVATOR CAB.

WALL PARTITION TYPES

REFER TO SHEET A6.21 FOR PARTITION ASSEMBLIES, GENERAL NOTES & DETAILS.

KEYNOTES
W1 PARTITION TO EXTEND TO THE UNDERSIDE OF EXISTING STRUCTURE, AND SEALED ACOUSTICALLY TO STRUCTURE SEE A6.21

SPRINKLER SYSTEM

1. THE SPRINKLER SYSTEM IN ALL AREAS OF THE PROJECT WILL BE CONCEALED WITHIN CEILING CONSTRUCTION EXCEPT THE FOLLOWING AREAS:
- THE INCLINED-CEILING AREAS ALONG THE PERIMETER OF THE THIRD LEVEL
  - a. TO SERVE THESE AREAS, THE SPRINKLER LINE TO EACH AREA IS TO PASS THROUGH EXISTING PENETRATIONS IN THE SEPARATING STRUCTURAL CONCRETE BEAM.
  - b. ONCE ON THE EXTERIOR SIDE OF THE SEPARATING CONCRETE BEAM, THE SPRINKLER LINE CAN RUN HORIZONTALLY WITHIN THE PERIMETER SPACE.
  - c. ALL EXPOSED SPRINKLER LINES IN THESE AREAS WILL HAVE SIMPLE 'T' OR 'L' FITTINGS BUT NO EXPOSED MULTIPLE 'T' OR 'L' FITTINGS. IF TRANSITIONS CANNOT BE ACHIEVED WITHOUT THE USE OF MULTIPLE 'T' OR 'L' FITTINGS, WELDED JOINTS SHALL BE USED.
  - d. SPRINKLER HEADS IN THE PERIMETER AREAS ARE TO BE EXPOSED SIDE-DISCHARGE UNITS.
  - e. ALL EXPOSED SPRINKLER PIPES AND FITTINGS ARE TO BE PAINTED A COLOR AS SELECTED BY THE ARCHITECT.
- MECHANICAL/ELECTRICAL/PLUMBING SPACES TO BE EXPOSED SIDE-DISCHARGE UNITS.
- STAIR B AND C CAN BE EXPOSED SIDE-DISCHARGE UNITS.
- THE SPRINKLER SYSTEM IN AREAS WHERE THE SPRINKLER IS REQUIRED TO BE CONCEALED, WILL RUN THROUGH EXISTING OPENINGS IN THE STRUCTURAL BEAMS.
- THE LAYOUT OF THE SPRINKLER LINES THROUGH THE STRUCTURAL BEAMS MUST BE CAREFULLY COORDINATED WITH ALL THE TRADES WHICH NEED TO RUN SYSTEMS THROUGH THE STRUCTURAL BEAMS.
- ALL SPRINKLER HEADS IN CEILINGS ARE TO BE CONCEALED HEADS. ALL COVERS TO BE FINISHED IN WHITE.

DIMENSIONING TO EXISTING CONDITIONS

1. EXISTING CONDITIONS INDICATED ARE OBTAINED FROM AVAILABLE SOURCES (EXISTING DRAWINGS, FIELD SURVEYS, ETC.) AND ARE NOT GUARANTEED TO BE TRUE AND EXACT. CONTRACTOR SHALL FIELD VERIFY

LEGEND

- EXIST'G WALL TO REMAIN
- NEW WALL
- NEW FLOOR STRUCTURE
- NEW FLOOR STRUCTURE
- FLOOR GRILLES
- EXCAVATED AND BACKFILLED AREAS
- 45° EXIST'G DOOR TO REMAIN
- 90° NEW DOOR
- 1-HOUR RATED FIRE PARTITION
- 2-HOUR RATED FIRE PARTITION
- FOUNDATION DRAIN

Architexas
Dallas I Austin I San Antonio
www.architexas.com
1907 Marilla St.
Second Floor
Dallas, TX 75201
p 214.748.4561

steinberg hart

RICHARDSON TEXAS
RICHARDSON 2021 CITY BOND PROGRAM

Richardson Public Library
RENOVATION PROJECT

900 CIVIC CENTER DRIVE, RICHARDSON, TX 75080

COPYRIGHT
The Contractor shall verify and be responsible for all dimensions. DO NOT scale the drawing. Any errors or omissions shall be reported to Architexas without delay. The Copyrights to all designs and drawings are the property of Architexas. Reproduction or use for any purpose other than that authorized by Architexas is forbidden.

REVISION HISTORY

1	04/19/2024	ISSUED FOR CONSTRUCTION
11	10/18/2024	PR 15
14	09/27/2024	PR 17
16	10/17/2024	PR 18
20	12/06/2024	PR 22

ISSUED FOR CONSTRUCTION

REGISTERED ARCHITECT DAVID M. CHEEK 18326 STATE OF TEXAS

#18326

Architexas No. 2211
Date 05/14/2024

Sheet Name
THIRD LEVEL FLOOR PLAN

Sheet Number
A1.08

GRADE REQUIREMENTS PER PROJECT SPECIFICATIONS

CUSTOM GRADE ITEMS:

1.
2.
3.
4.

PREMIUM GRADE ITEMS:

1.
2.
3.
4.

RICHARDSON PUBLIC LIBRARY RENOVATION
900 CIVIC CENTER DRIVE,
RICHARDSON, TX 75080

MANUFACTURER FIRM:

SIGNATURE CASEWORK
9144 King Arthur Dr. Dallas, TX. 75247
Office : 214-688-1966
Fax: 214-689-0787
Email: PHix@p-lam.com
Contact: PERRY HIX

DESIGN FIRM:
ARCHITEXAS
1907 MARILLA ST. SECOND FLOOR
DALLAS TX 75201

CONTRACTOR FIRM:
BALFOUR BEATTY
3100 McKINNON STREET, 6TH FLOOR
DALLAS, TX 75201
214-451-1500

INSTALLATION FIRM:
SIGNATURE CASEWORK
9144 KING ARTHUR DR. DALLAS, TX 75247
OFFICE: 214-688-1966
EMAIL: jsmith@p-lam.com
CONTACT: JEFF SMITH

FINISHER FIRM:
SIGNATURE CASEWORK
9144 KING ARTHUR DR. DALLAS, TX 75247
OFFICE: 214-688-1966
EMAIL: jsmith@p-lam.com
CONTACT: JEFF SMITH

GENERAL NOTES:

MANUFACTURER :
Signature CASEWORK
9144 KING ARTHUR DRIVE
Dallas, Texas 75247
Tel. 214-688-1966
Fax. 214-689-0787

PROJECT COVER SHEET:
Richardson Public Library Renovation

900 Civic Center Drive,
Richardson, TX 75080

Revision:

Drawn by:

Date:

Scale:

Drawning:

COVER

9144 KING ARTHUR DR. DALLAS, TX. 75247

SAMPLE BREAK ROOM

Richardson Public Library
900 Civic Center Drive,
Richardson, TX 75080

LAMINATE WITH NEMA GRADE AND THICKNESS:

LAM1: FORMICA #6212-58 WHEAT STRAND; MATTE
LAM2: LAMINART METAL-ART #665 RADIANT CHAMPAGNE
LAM3: ABET LAMINATI #849 BLU PAVONE; SEI
LAM4: ABET LAMINATI #851 BLUE COBALTO; SEI
LAM5: ABET LAMINATI #847 AZZURRO; SEI
LAM6: ABET LAMINATI #1824 BLUE AMARGOS; SEI
LAM7: ABET LAMINATI #842 VERDE SUB; SEI
LAM8: ABET LAMINATI #1852 VERDE OLIVIA; SEI
LAM9: FORMICA COLORCORE #J0032 BIANCO KOS

SOLID SURFACE LIST:

QZ1: WILSONART QUARTZ #Q2001 LYRA
QZ2: WILSONART QUARTZ #Q2024 VIA AUGUSTA

SPECIALTY METAL, GLASS,
FABRIC, ECT.: N/A

ADHESIVE REQUIREMENTS:

1.

FINISH REQUIREMENTS: N/A

CASEWORK :

1. EXPOSED SURFACES MATERIALS:
a. VGS LAMINATE BALANCED WITH HIGH-PRESSURE CABINET LINER

2. SEMI-EXPOSED SURFACE MATERIALS:
a. THERMALLY FUSED MELAMINE PARTICLEBOARD
b. HOT-MELT ADHESIVE ON 3mm PVC

3. CONCEALED SURFACE MATERIALS:
a. THERMALLY FUSED MELAMINE PARTICLEBOARD

4. DRAWER MATERIALS:
a. 3/4" THERMALLY FUSED WHITE LAMINATE ON WHITE MELAMINE SIDES DRAWER BOTTOMS

HARDWARE LIST WITH MANUFACTURES SPECIFICATIONS:

HINGES: BLUM 71T558 120°. PER SHEET #A8.01 ID3
DRAWER SLIDES: KNAPE & VOGT KVTT100 (FULL EXTENSION). PER SHEET #A8.01 ID9
DOOR/DRAWER PULLS: DOUG MOCKET DP3A SATIN CHROME (3" PULL TAB). PER SHEET #A8.01 ID1
DOOR/DRAWER PULLS: DOUG MOCKET DP3C SATIN CHROME (6" PULL TAB). PER SHEET #A8.01 ID2
SHELF SUPPORT: HAFELE 282.04.711 NICKEL. PER SHEET #A8.01 ID11
LOCKS: DOOR LOCKS TIMBERLINE COMPX CB290. PER SHEET #A8.01 ID7
LOCKS: DRAWER LOCKS TIMBERLINE COMPX CB280. PER SHEET #8.01 ID7
ELBOW CATCH: IVES #2 FIXED DOOR CATCH. PER SHEET #A8.01 ID5

MANUFACTURER :
Signature CASEWORK
9144 KING ARTHUR DRIVE
Dallas, Texas 75247
Tel. 214-688-1966
Fax. 214-689-0787

PROJECT COVER SHEET:

Revision:

Drawn by:

Date:

Scale:

Drawning:

SPEC-1

9144 KING ARTHUR DR. DALLAS, TX. 75247

SAMPLE BREAK ROOM

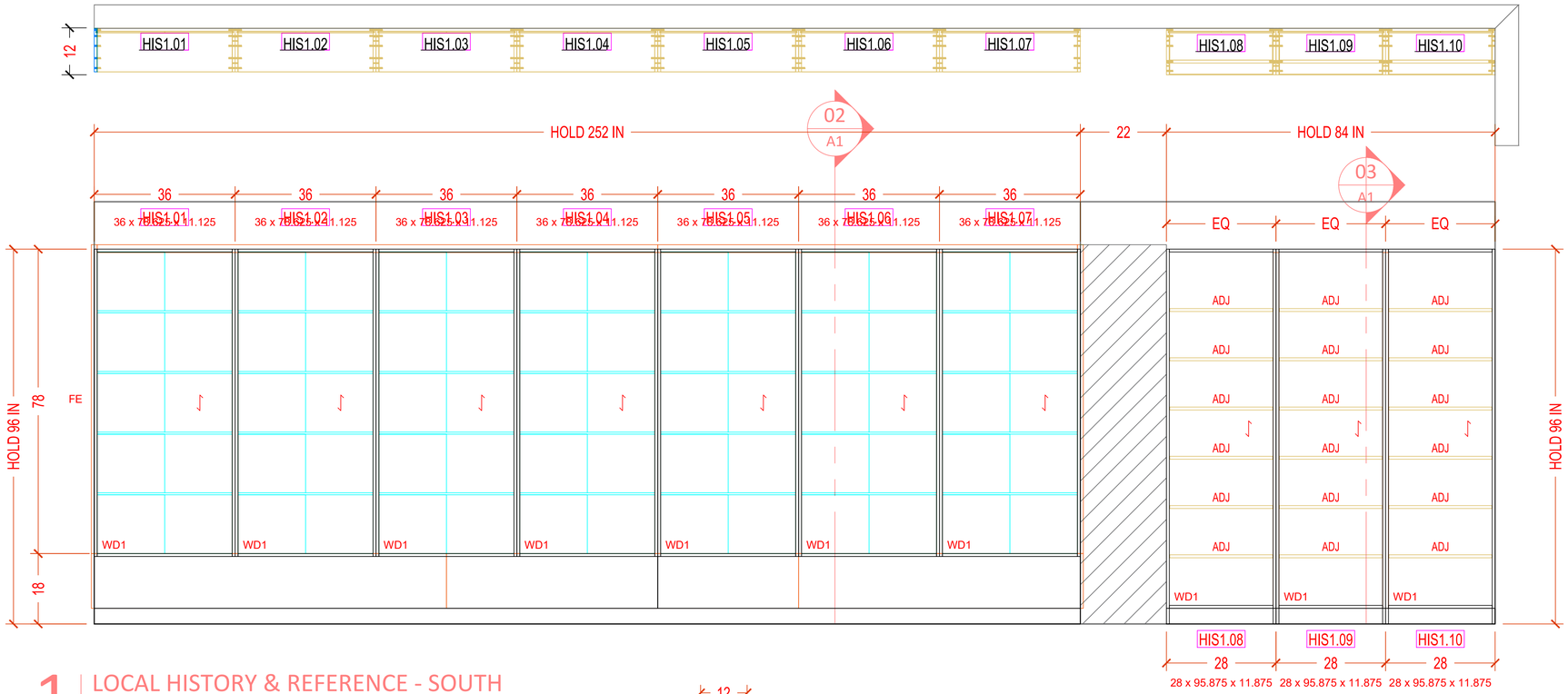

1 LOCAL HISTORY & REFERENCE - SOUTH
LOWER FLOOR 1/A702 - ELEV 4/A7.02

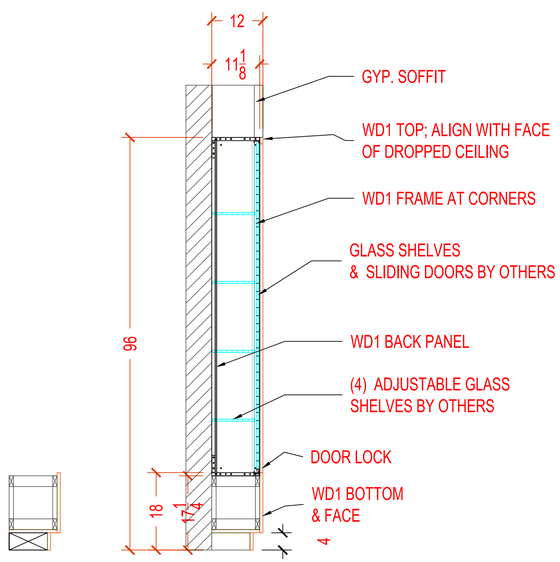

02
A1

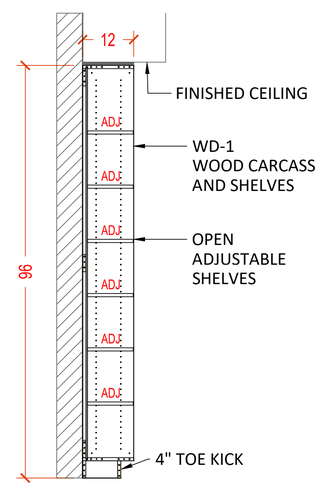

03
A1

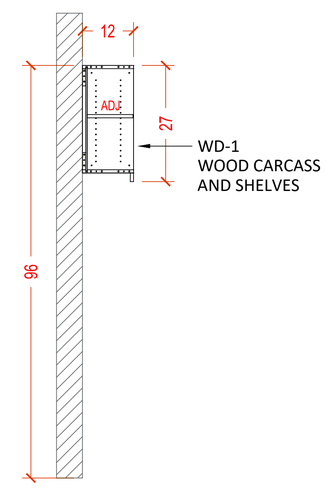

04
A1

LOWER LEVEL - A1.02

MANUFACTURER :
Signature CASEWORK
9144 KING ARTHUR DRIVE
Dallas, Texas 75247
Tel. 214-688-1966
Fax. 214-689-0787

PROJECT COVER SHEET:

Revision:

Drawn by:

Date:

Scale:

Drawning:

A1

9144 KING ARTHUR DR. DALLAS, TX. 75247

SAMPLE BREAK ROOM

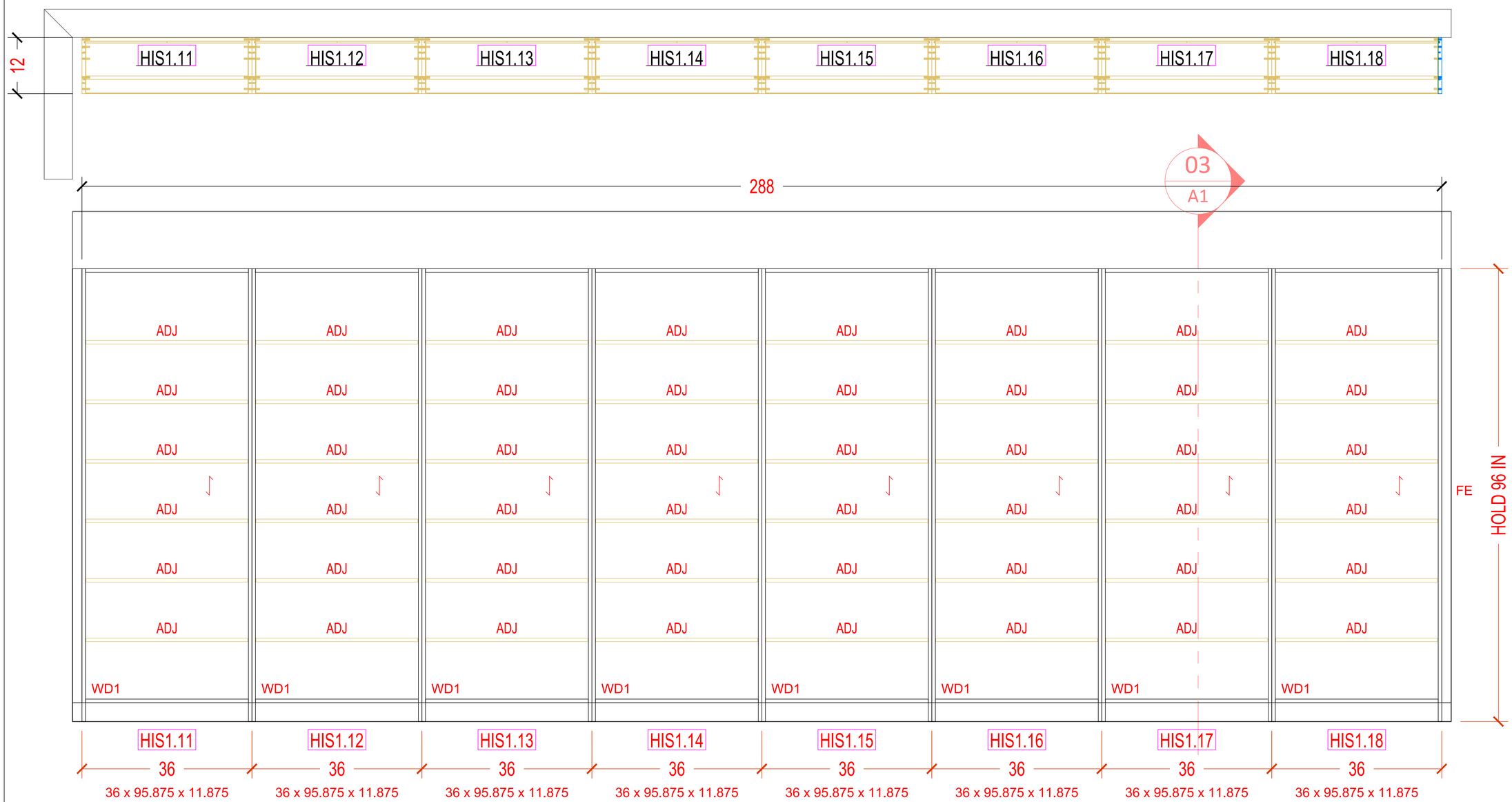

1 LOCAL HISTORY & REFERENCE - WEST
LOWER FLOOR 1/A702 - ELEV 5/A7.02

LOWER LEVEL - A1.02

MANUFACTURER :
Signature CASEWORK
9144 KING ARTHUR DRIVE
Dallas, Texas 75247
Tel. 214-688-1966
Fax. 214-689-0787

PROJECT COVER SHEET:

9144 KING ARTHUR DR. DALLAS, TX. 75247

SAMPLE BREAK ROOM

Revision:

Drawn by:

Date:

Scale:

Drawning:

A2

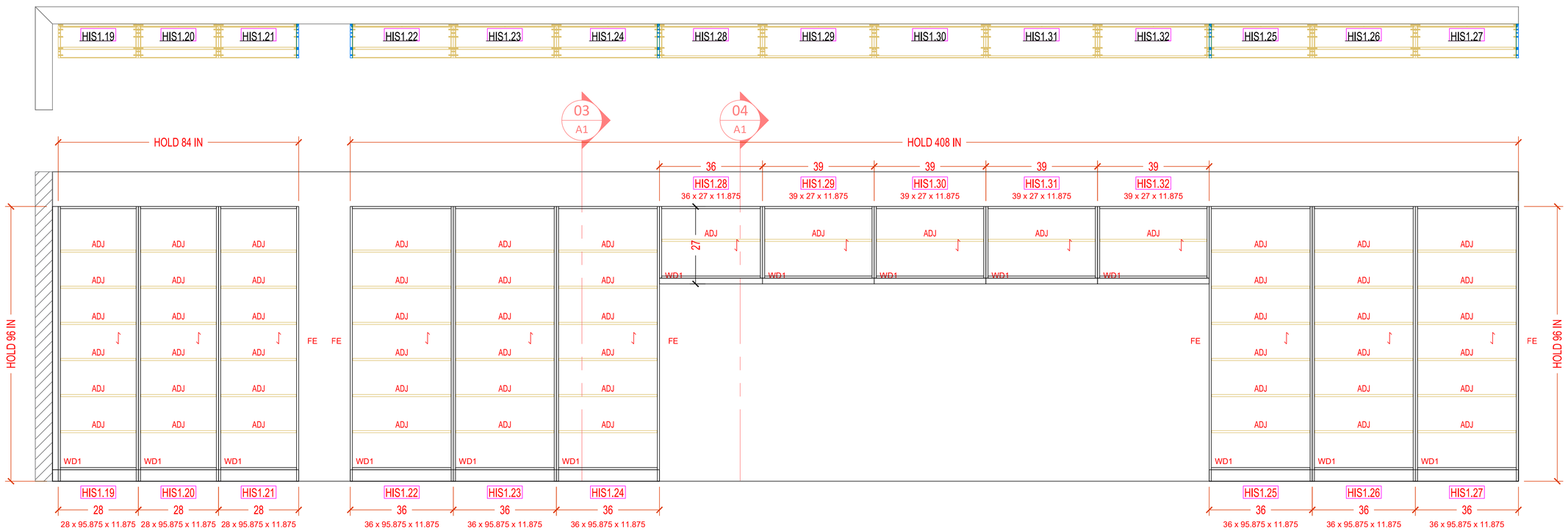

1 LOCAL HISTORY & REFERENCE - NORTH
LOWER FLOOR 1/A702 - ELEV 2/A7.02

LOWER LEVEL - A1.02

MANUFACTURER :
Signature CASEWORK
9144 KING ARTHUR DRIVE
Dallas, Texas 75247
Tel. 214-688-1966
Fax. 214-689-0787

PROJECT COVER SHEET:

9144 KING ARTHUR DR. DALLAS, TX. 75247

SAMPLE BREAK ROOM

Revision:

Drawn by:

Date:

Scale:

Drawning:

A3

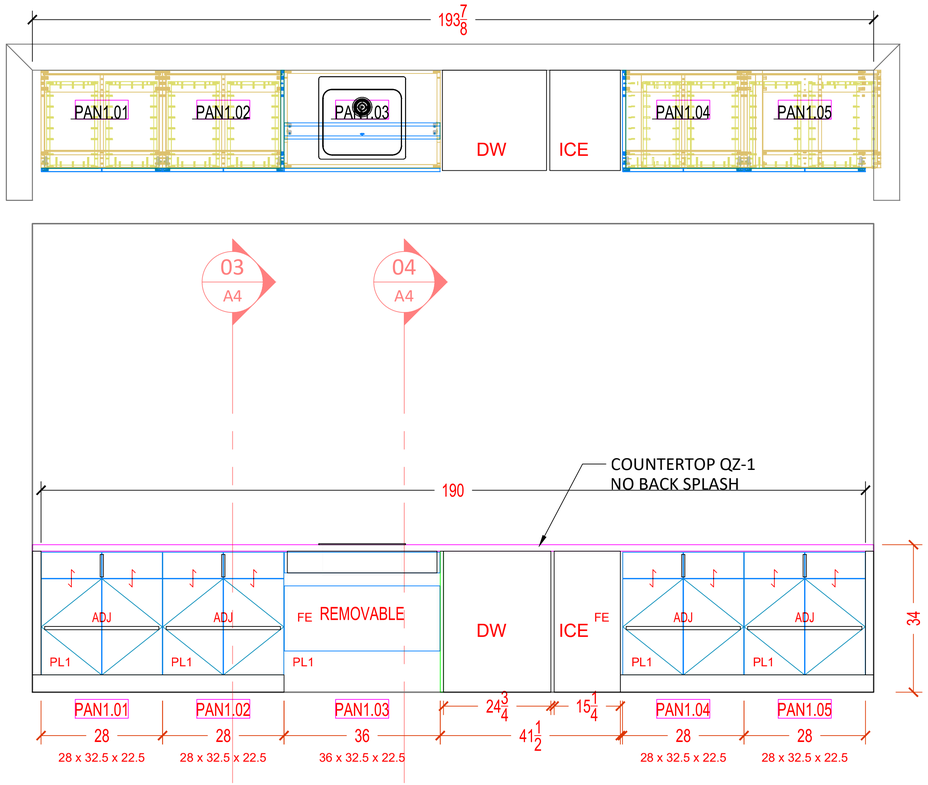

1 PANTRY - ROOM: W.011A
ELEV. 7/A7.04 - 4/A8.12

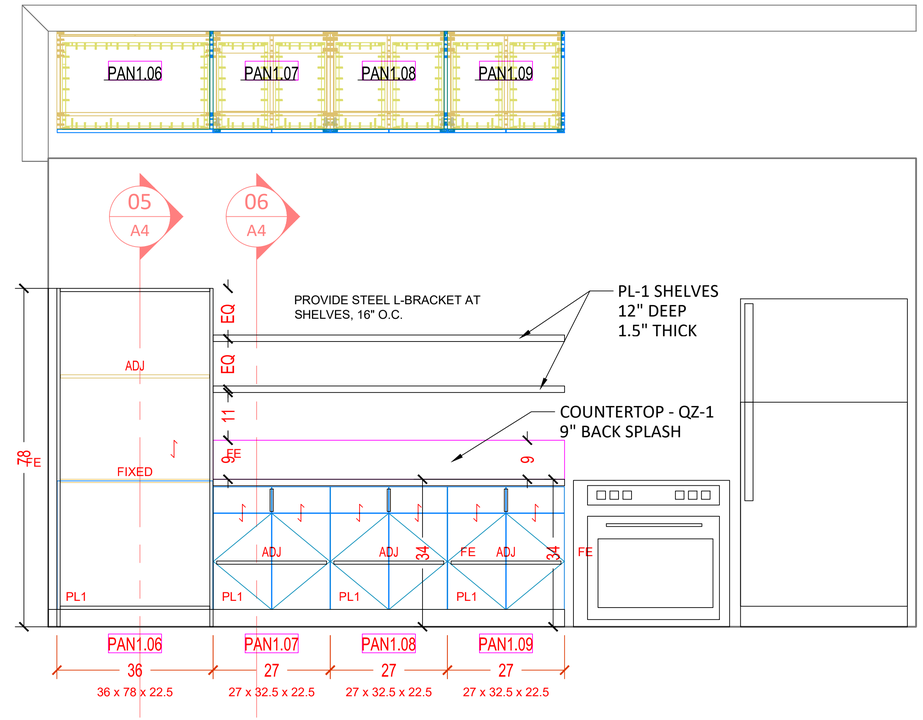

2 PANTRY - ROOM: E. 011A
ELEV. 6/A7.04 - 2/A8.12

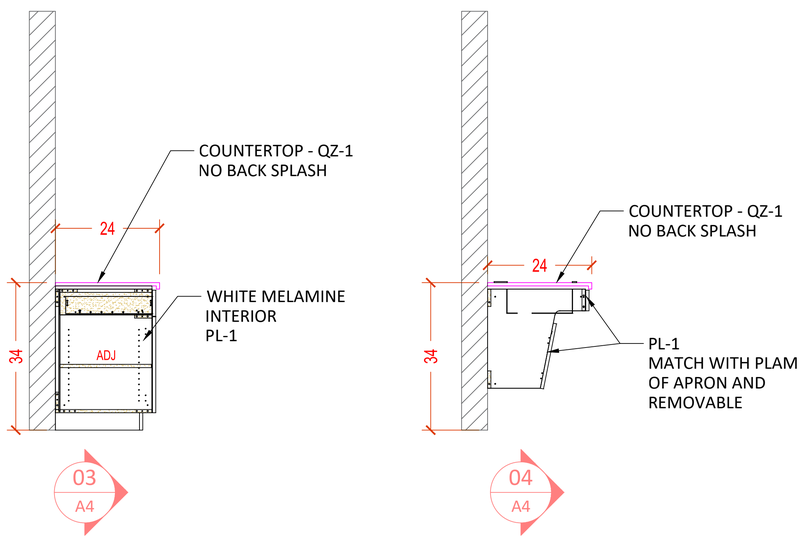

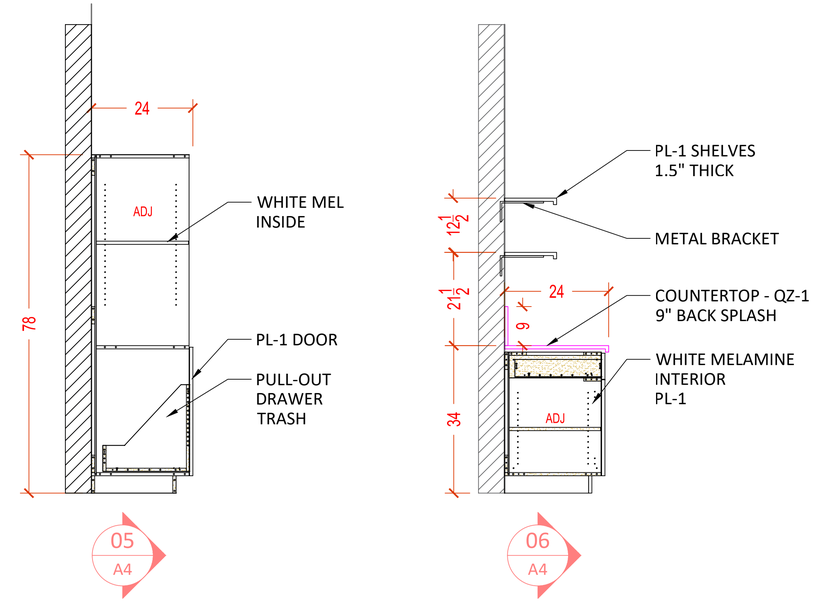

LOWER LEVEL - A1.02

MANUFACTURER :
Signature CASEWORK
9144 KING ARTHUR DRIVE
Dallas, Texas 75247
Tel. 214-688-1966
Fax. 214-689-0787

PROJECT COVER SHEET:

Revision:

Drawn by:

Date:

Scale:

Drawning:

A4

9144 KING ARTHUR DR. DALLAS, TX. 75247

SAMPLE BREAK ROOM

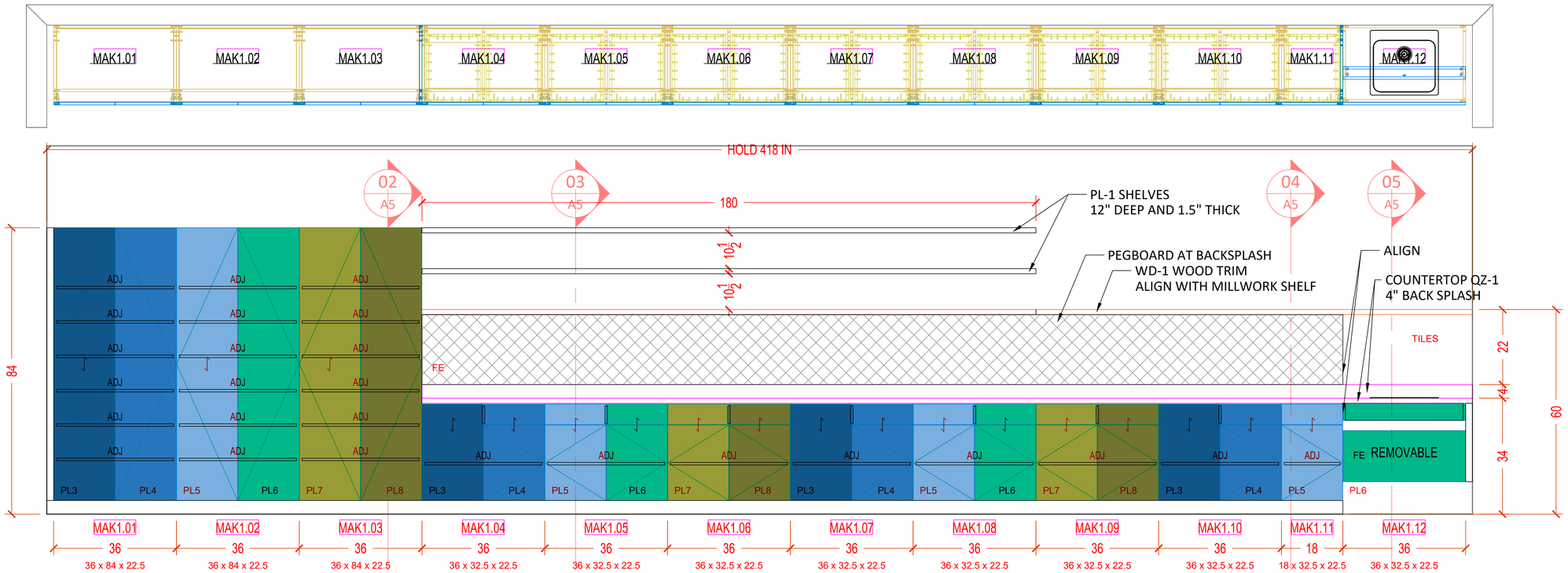

1 MAKERSPACE - 008
LOWER LEV - ELEV. 4/A7.05 - A8.11

NOTE:
CABINET BOX EDGE BANDING TO MATCH DOOR COLOR
CABINET DOORS EDGE BANDING SAME AS CABINET DOOR COLOR

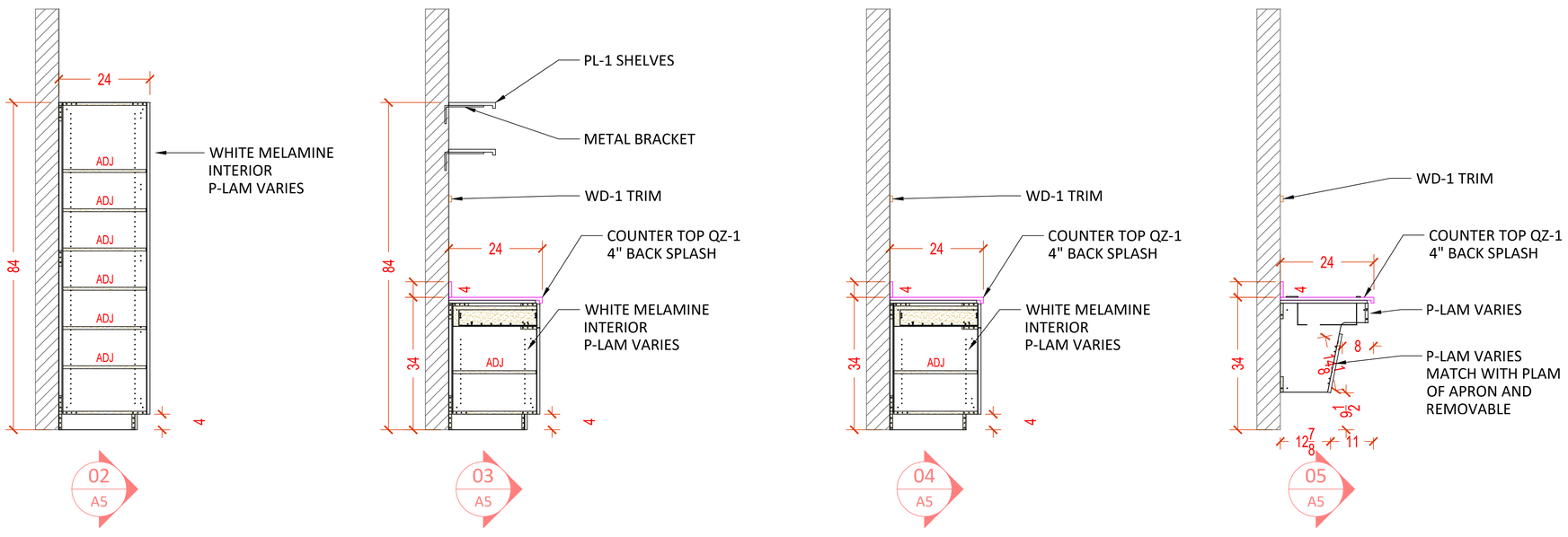

LOWER LEVEL - A1.02

MANUFACTURER :
Signature CASEWORK
9144 KING ARTHUR DRIVE
Dallas, Texas 75247
Tel. 214-688-1966
Fax. 214-689-0787

PROJECT COVER SHEET:

Revision:

Drawn by:

Date:

Scale:

Drawning:

A5

9144 KING ARTHUR DR. DALLAS, TX. 75247

SAMPLE BREAK ROOM

ALL VANITY: P-LAM - FORMICA- COLORCORE #J0032 - BIANCO KOS
ALL COUNTERTOP - QZ-2 - WILSONART QUARTZ #Q2024 VIA AUGUSTA

LOWER LEVEL - A1.02

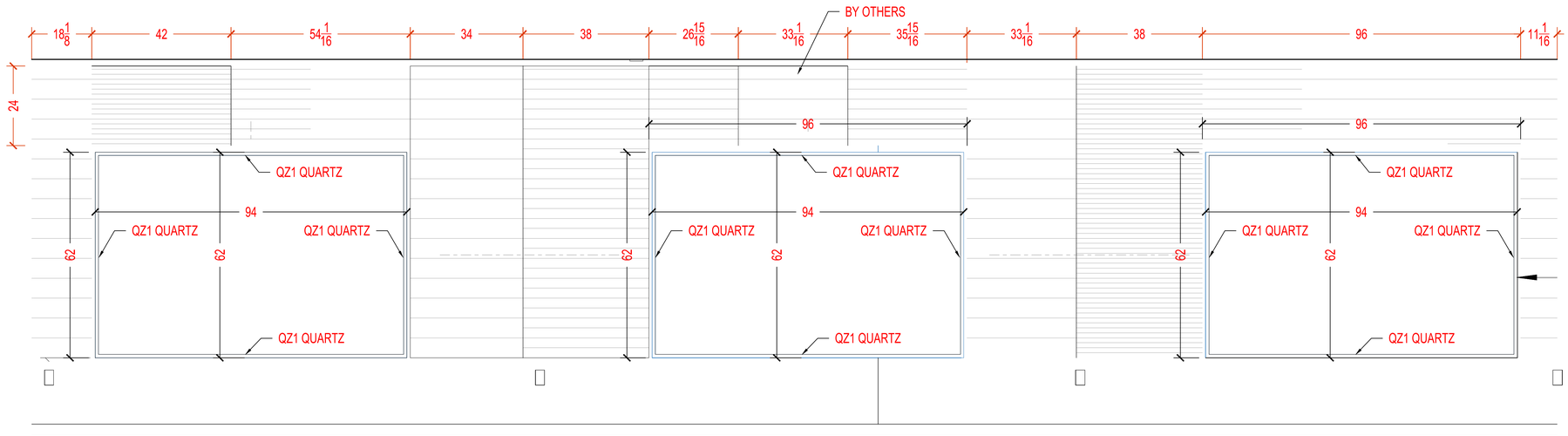

1 MULTIPURPORSE RR-009
LOWER LEV - ELEV 7/A7.03

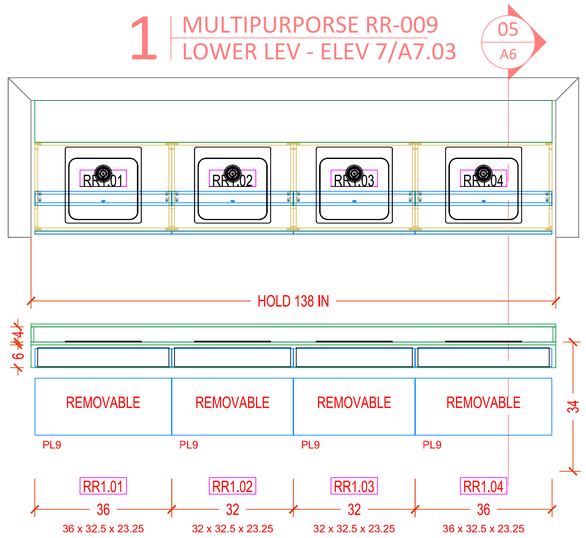

2 MEN'S RR01 - LOWER LEV
ELEV. 1/A4.12 - A8.19

BOX: W: 140" H: 38" D: 10 $\frac{1}{4}$"

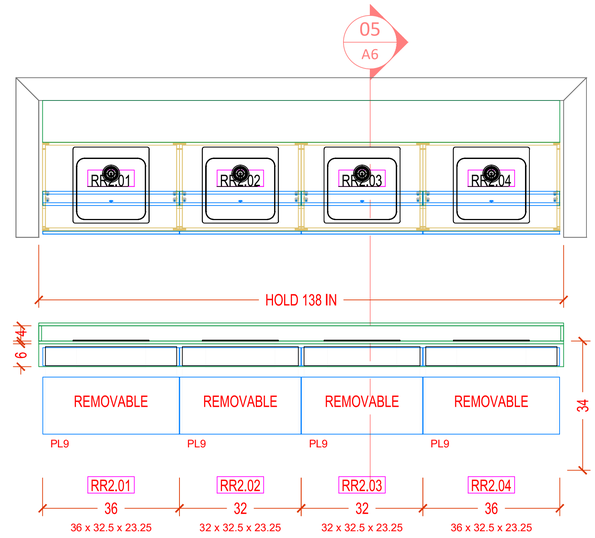

3 WOMEN'S RR02 - LOWER LEV
ELEV. A1.02 - A8.19

BOX: W: 140" H: 38" D: 10 $\frac{1}{4}$"

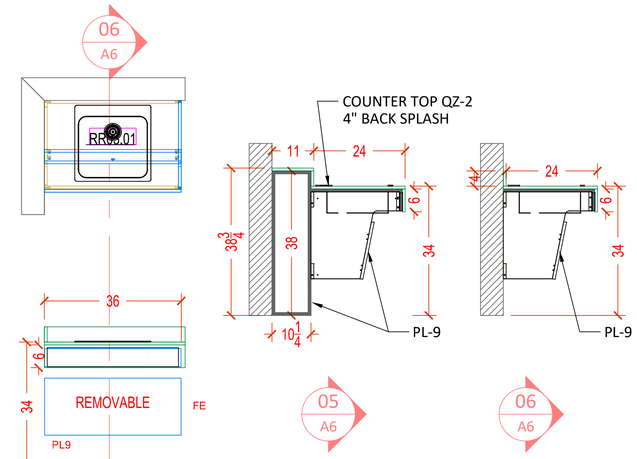

4 ADA TOILET RR03 - LOWER LEV
ELEV. A1.02 - NO RAISED SHELF - A8.19

NO RAISED BACK SPLASH
4" BACK SPLASH

MANUFACTURER :
Signature CASEWORK
9144 KING ARTHUR DRIVE
Dallas, Texas 75247
Tel. 214-688-1966
Fax. 214-689-0787

PROJECT COVER SHEET:

Revision:

Drawn by:

Date:

Scale:

Drawning:

A6

9144 KING ARTHUR DR. DALLAS, TX. 75247

SAMPLE BREAK ROOM

ALL VANITY: P-LAM - FORMICA- COLORCORE #J0032 - BIANCO KOS
ALL COUNTERTOP - QZ-2 - WILSONART QUARTZ #Q2024 VIA AUGUSTA

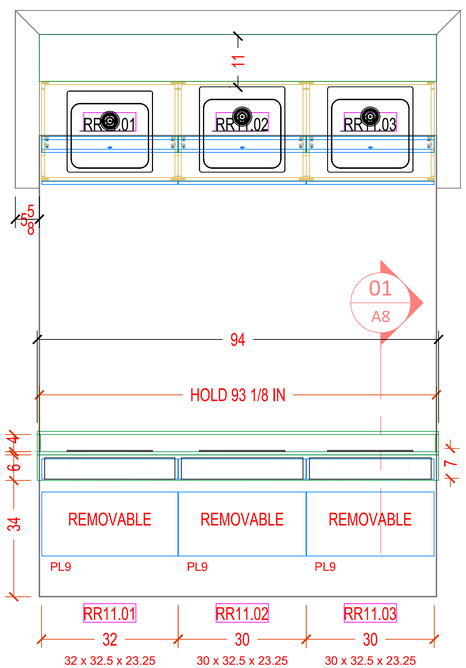

1 MEN'S RR - LEV 1 - RR11
ELEV. 7/A4.13 - A8.19

BOX: W: 94" H: 38" D: 10 $\frac{1}{4}$"

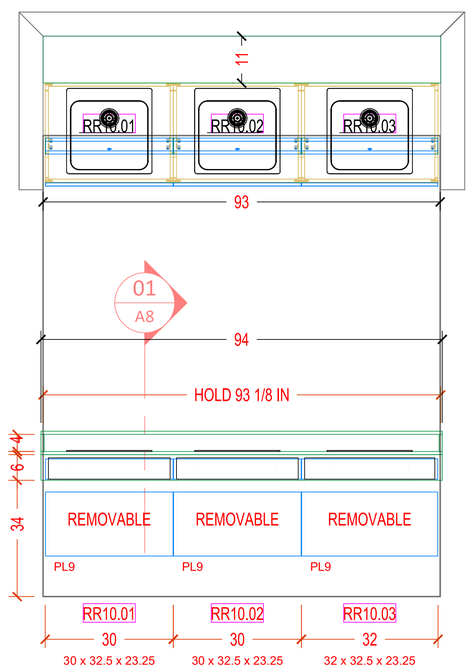

2 WOMEN'S RR - LEV 1 - RR10
ELEV. 3/A4.13 - A8.19

BOX: W: 94" H: 38" D: 10 $\frac{1}{4}$"

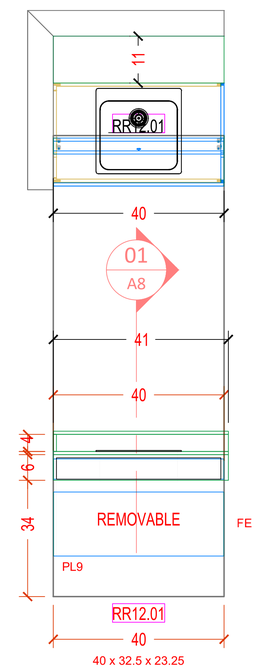

3 ADA - RR12 - LEV 1
ELEV. 3/A4.13 - A8.19

BOX: W: 41 $\frac{1}{2}$" H: 38" D: 10 $\frac{1}{4}$"
RIGHT FINISHED END

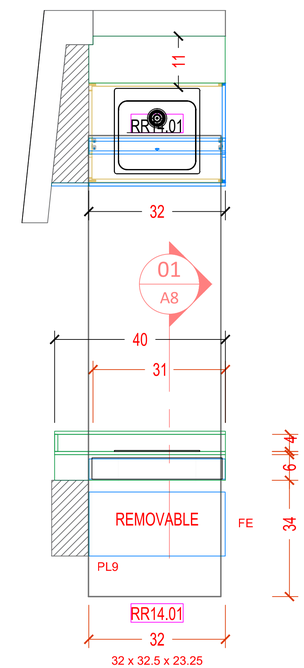

4 FAMILY RR14 - LEV 1
ELEV. 13/A4.13 - A8.19

BOX: W: 40" H: 38" D: 10 $\frac{1}{4}$"
RIGHT FINISHED END

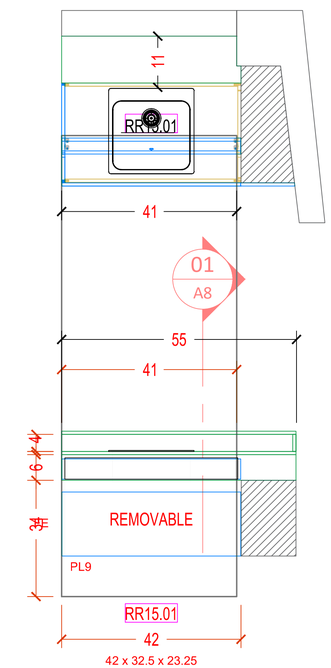

5 MOTHER'S RR15 - LEV 1
ELEV. 18/A4.13 - A8.19

BOX: W: 55" H: 38" D: 10 $\frac{1}{4}$"
LEFT FINISHED END

LEVEL 1 - A1.04

MANUFACTURER :
Signature CASEWORK
9144 KING ARTHUR DRIVE
Dallas, Texas 75247
Tel. 214-688-1966
Fax. 214-689-0787

PROJECT COVER SHEET:

9144 KING ARTHUR DR. DALLAS, TX. 75247

SAMPLE BREAK ROOM

Revision:

Drawn by:

Date:

Scale:

Drawning:

A7

ALL VANITY IN RESTROOM AREA: P-LAM 9 - FORMICA- COLORCORE #J0032 - BIANCO KOS
ALL COUNTERTOP IN RESTROOM AREA - QZ-2 - WILSONART QUARTZ #Q2024 VIA AUGUSTA

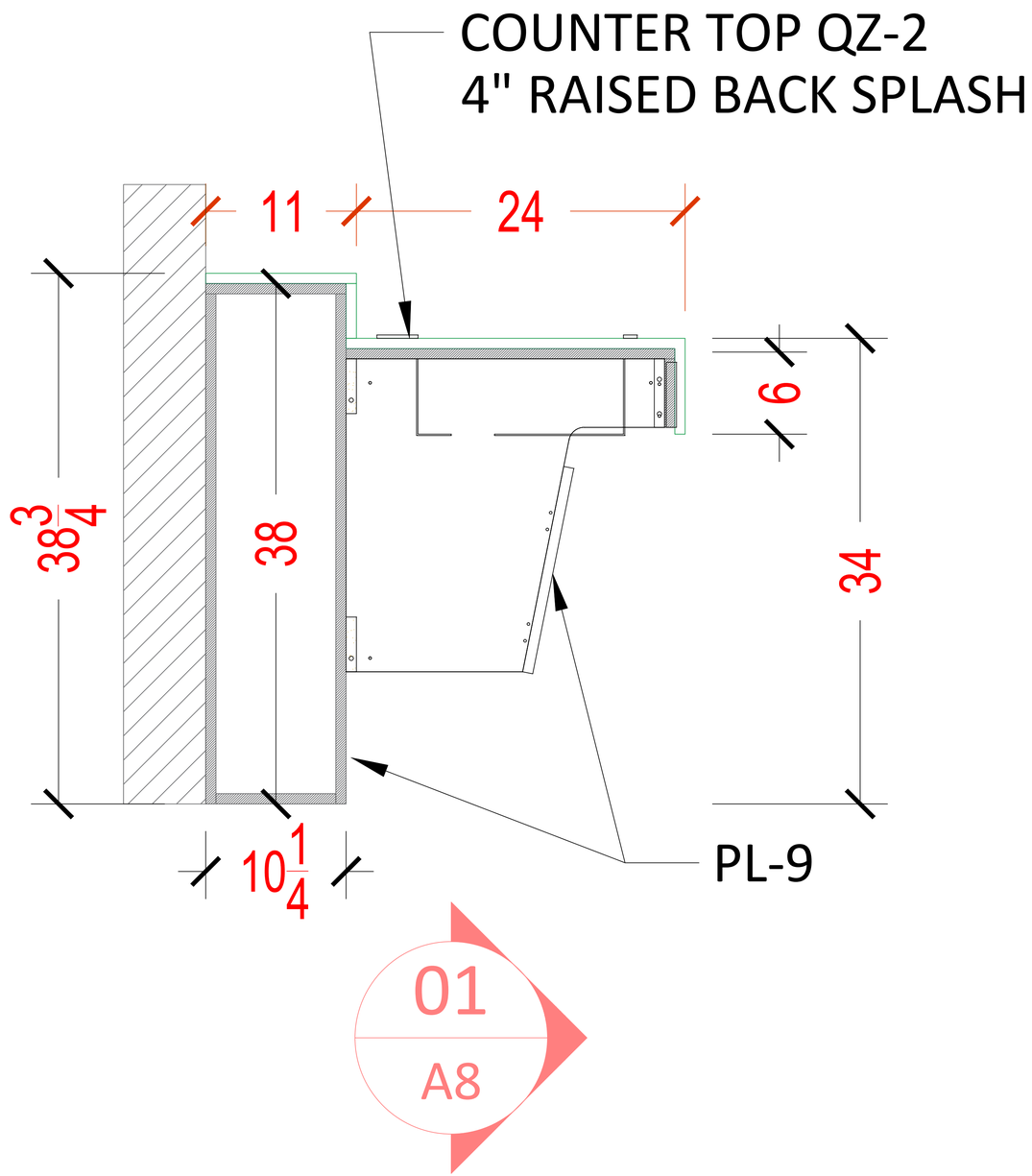

MANUFACTURER :
Signature CASEWORK
9144 KING ARTHUR DRIVE
Dallas, Texas 75247
Tel. 214-688-1966
Fax. 214-689-0787

PROJECT COVER SHEET:

Revision:

Drawn by:

Date:

Scale:

Drawning:

A8

9144 KING ARTHUR DR. DALLAS, TX. 75247

SAMPLE BREAK ROOM

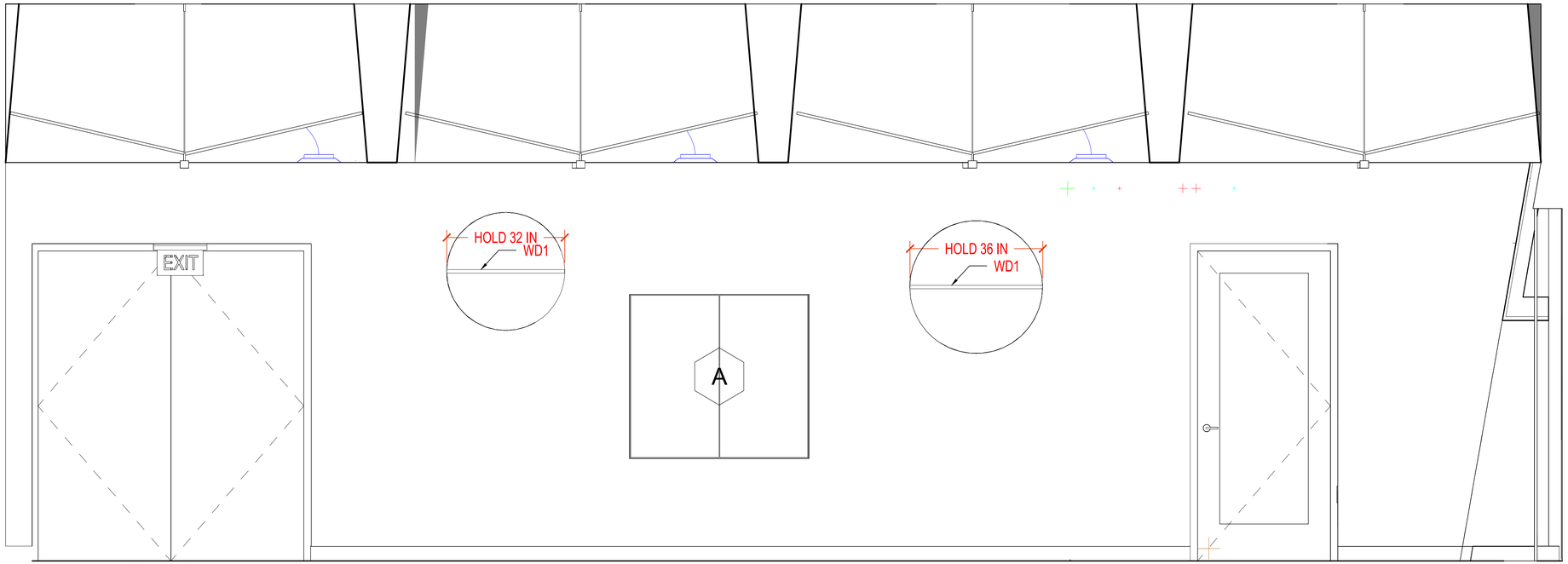

1 STORYTIME - 114
LEV-1 ELEV 9/A7.18 - EAST

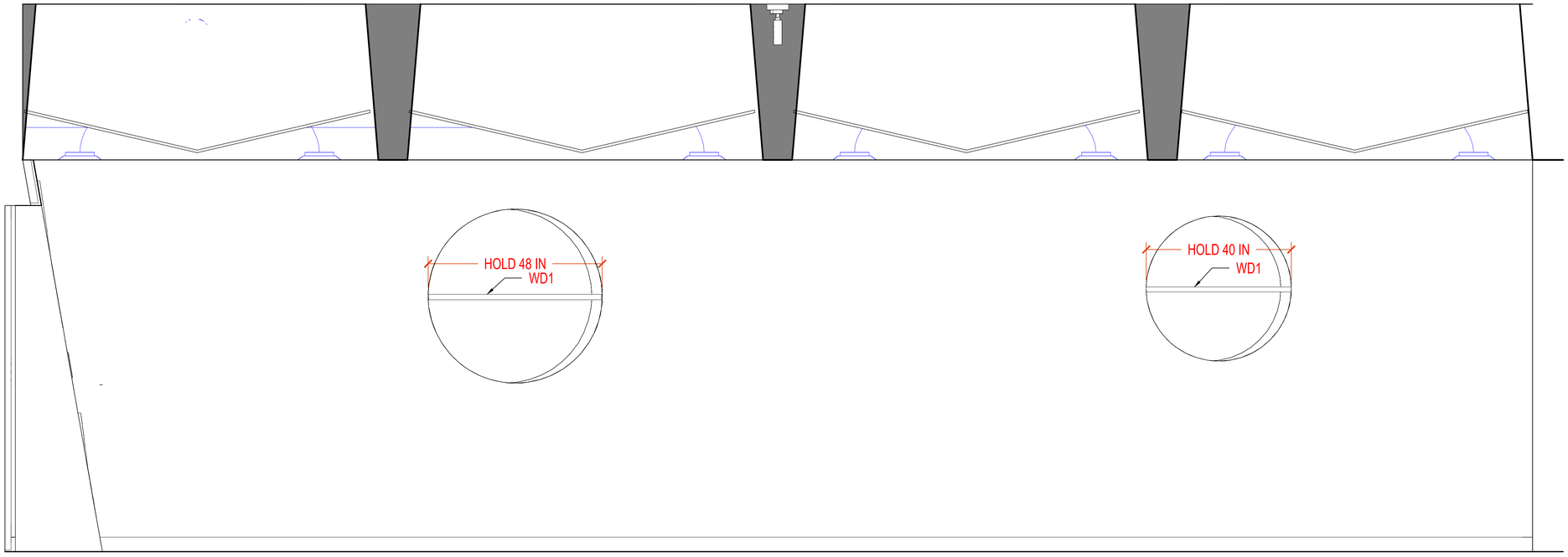

3 STORYTIME - 114
LEV-1 ELEV 11/A7.18 - WEST

LEVEL 1 - A1.04

MANUFACTURER :
Signature CASEWORK
9144 KING ARTHUR DRIVE
Dallas, Texas 75247
Tel. 214-688-1966
Fax. 214-689-0787

PROJECT COVER SHEET:

Revision:

Drawn by:

Date:

Scale:

Drawning:

A9

9144 KING ARTHUR DR. DALLAS, TX. 75247

SAMPLE BREAK ROOM

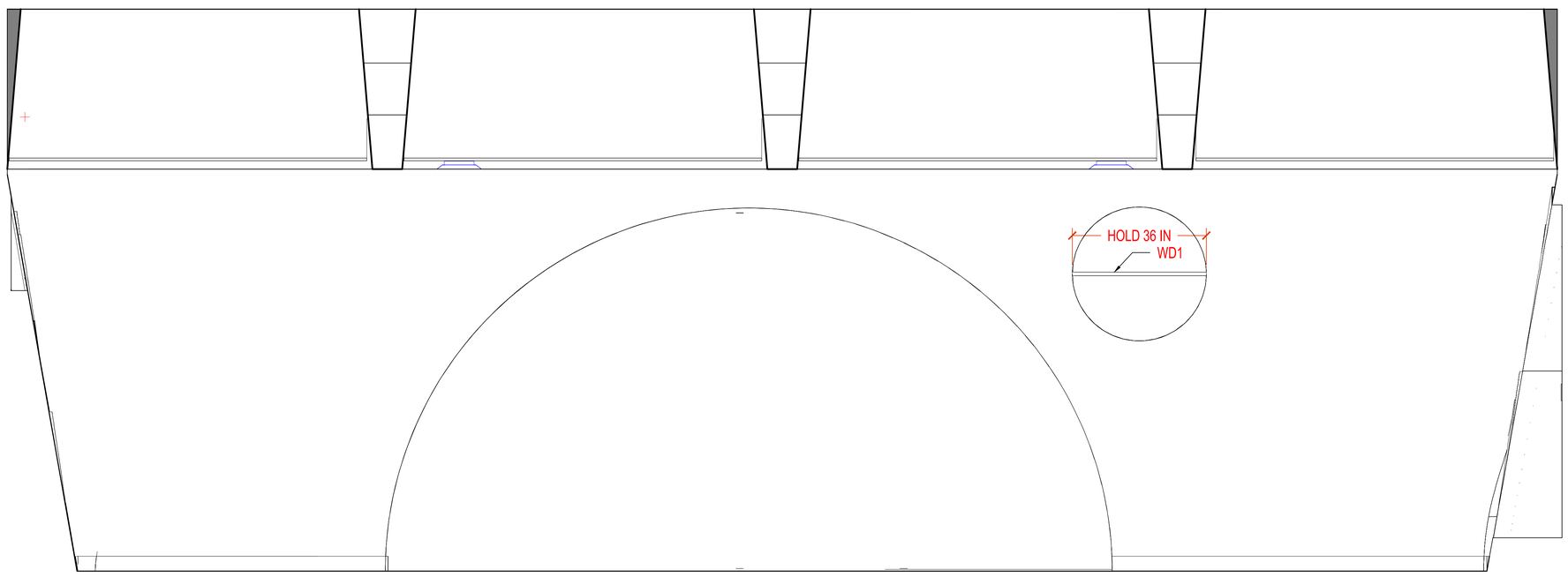

2 STORYTIME - 114
LEV-1 ELEV 10/A7.18 - SOUTH

LEVEL 1 - A1.04

MANUFACTURER :

Signature CASEWORK
9144 KING ARTHUR DRIVE
Dallas, Texas 75247
Tel. 214-688-1966
Fax. 214-689-0787

PROJECT COVER SHEET:

SAMPLE BREAK ROOM

9144 KING ARTHUR DR. DALLAS, TX. 75247

Revision:

Drawn by:

Date:

Scale:

Drawning:

A9.1

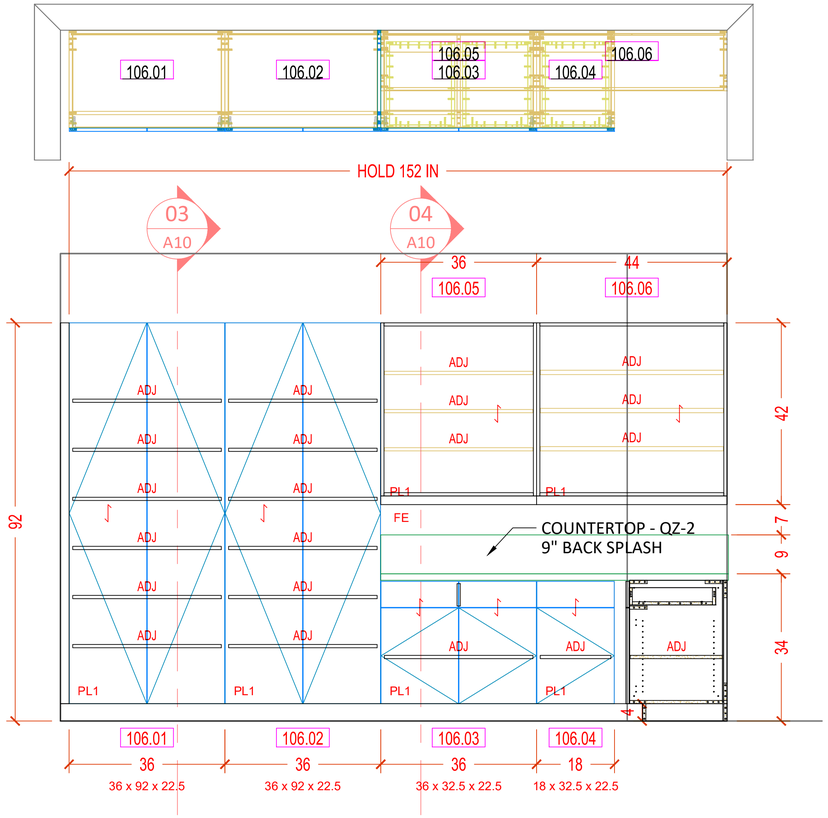

1 MAIL ROOM - ROOM: 106 E
LEV 1 - ELEV. 12/A7.14 - 3/A8.09

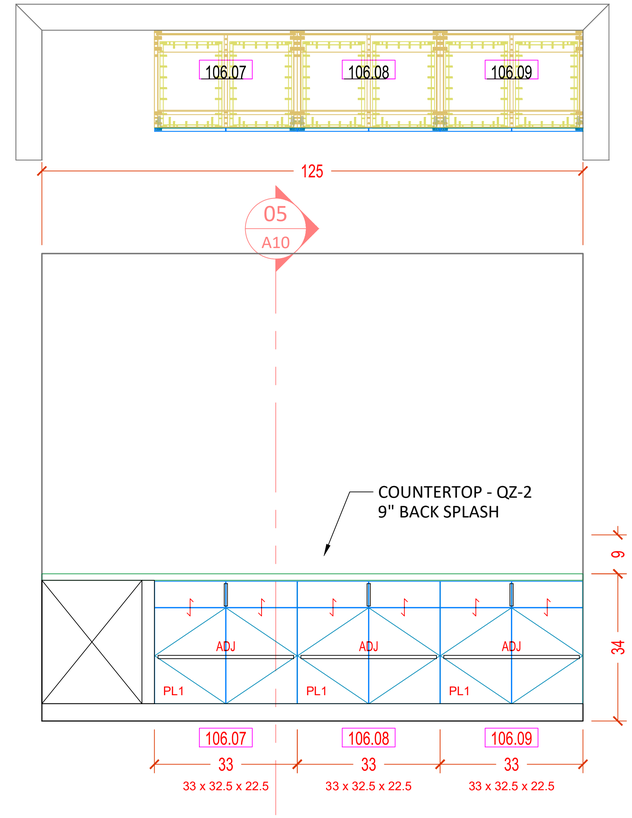

2 MAIL ROOM - ROOM: 106 S
LEV 1 - ELEV. 13/A7.14 - 2/A8.09

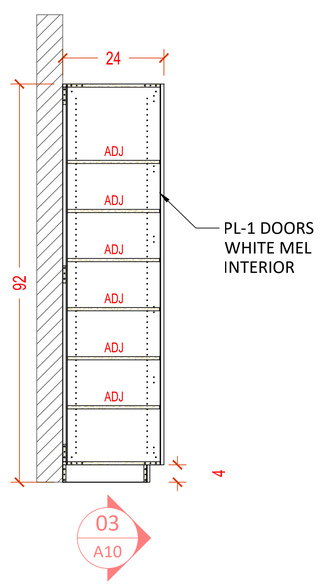

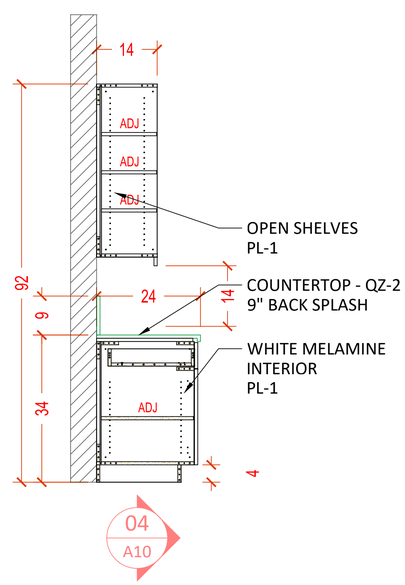

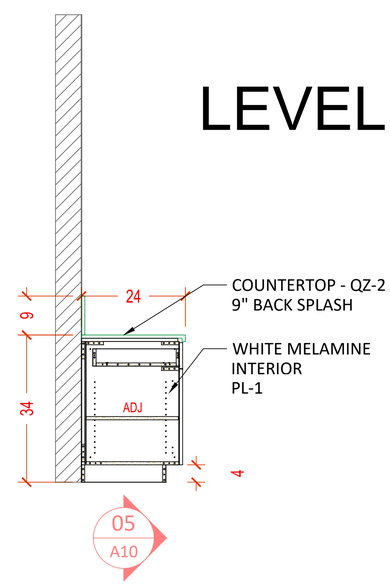

LEVEL 1 - A1.04

MANUFACTURER :
Signature CASEWORK
9144 KING ARTHUR DRIVE
Dallas, Texas 75247
Tel. 214-688-1966
Fax. 214-689-0787

PROJECT COVER SHEET:

Revision:

Drawn by:

Date:

Scale:

Drawning:

A10

9144 KING ARTHUR DR. DALLAS, TX. 75247

SAMPLE BREAK ROOM

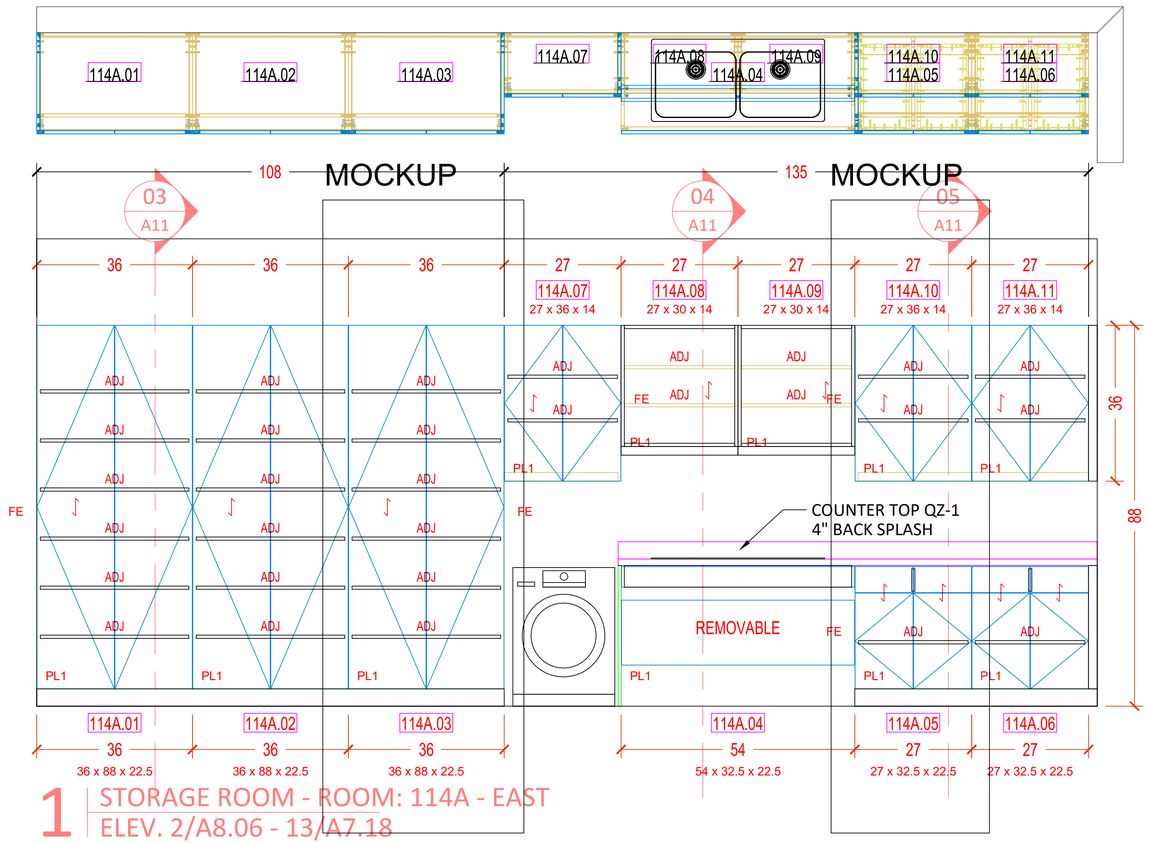

1 STORAGE ROOM - ROOM: 114A - EAST
ELEV. 2/A8.06 - 13/A7.18

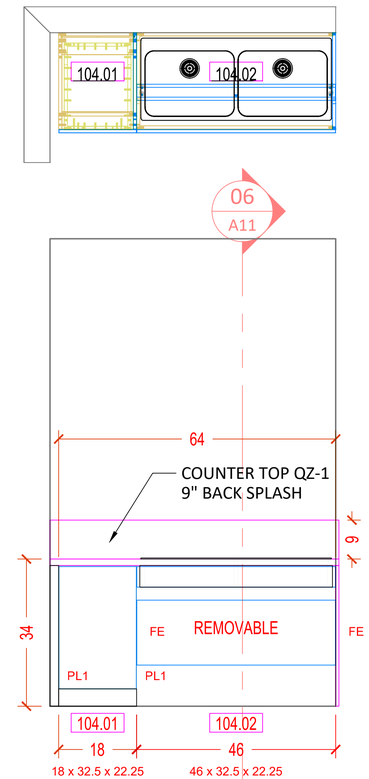

2 CIRCULATION SUITE 104
LEV 1 - ELEV. 4/A7.14 - 5/A8.09

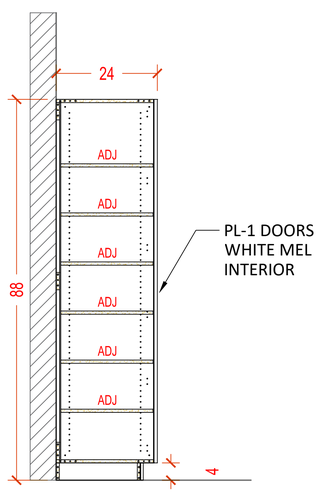

03
A11

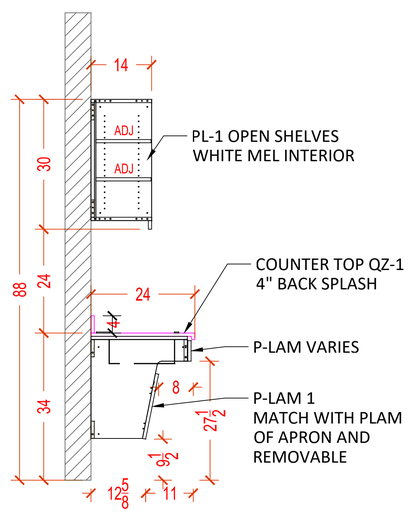

04
A11

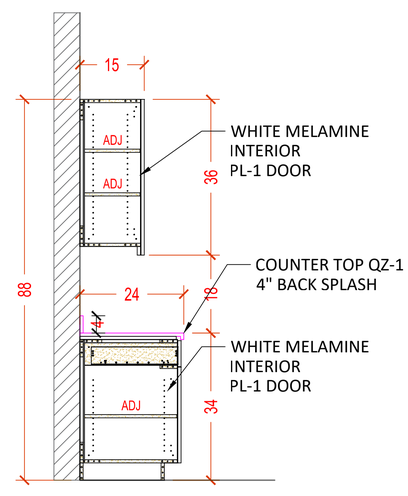

05
A11

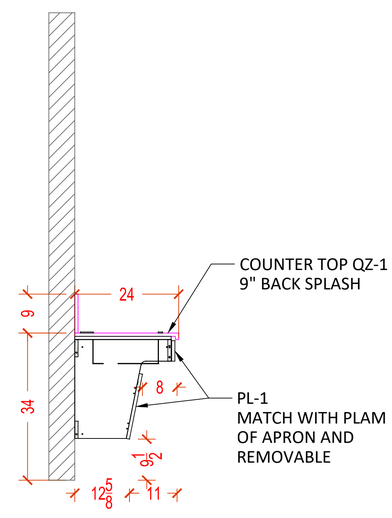

06
A11

LEVEL 1 - A1.04

MANUFACTURER :
Signature CASEWORK
9144 KING ARTHUR DRIVE
Dallas, Texas 75247
Tel. 214-688-1966
Fax. 214-689-0787

PROJECT COVER SHEET:

Revision:

Drawn by:

Date:

Scale:

Drawning:

A11

9144 KING ARTHUR DR. DALLAS, TX. 75247

SAMPLE BREAK ROOM

LEVEL 1 - A1.04

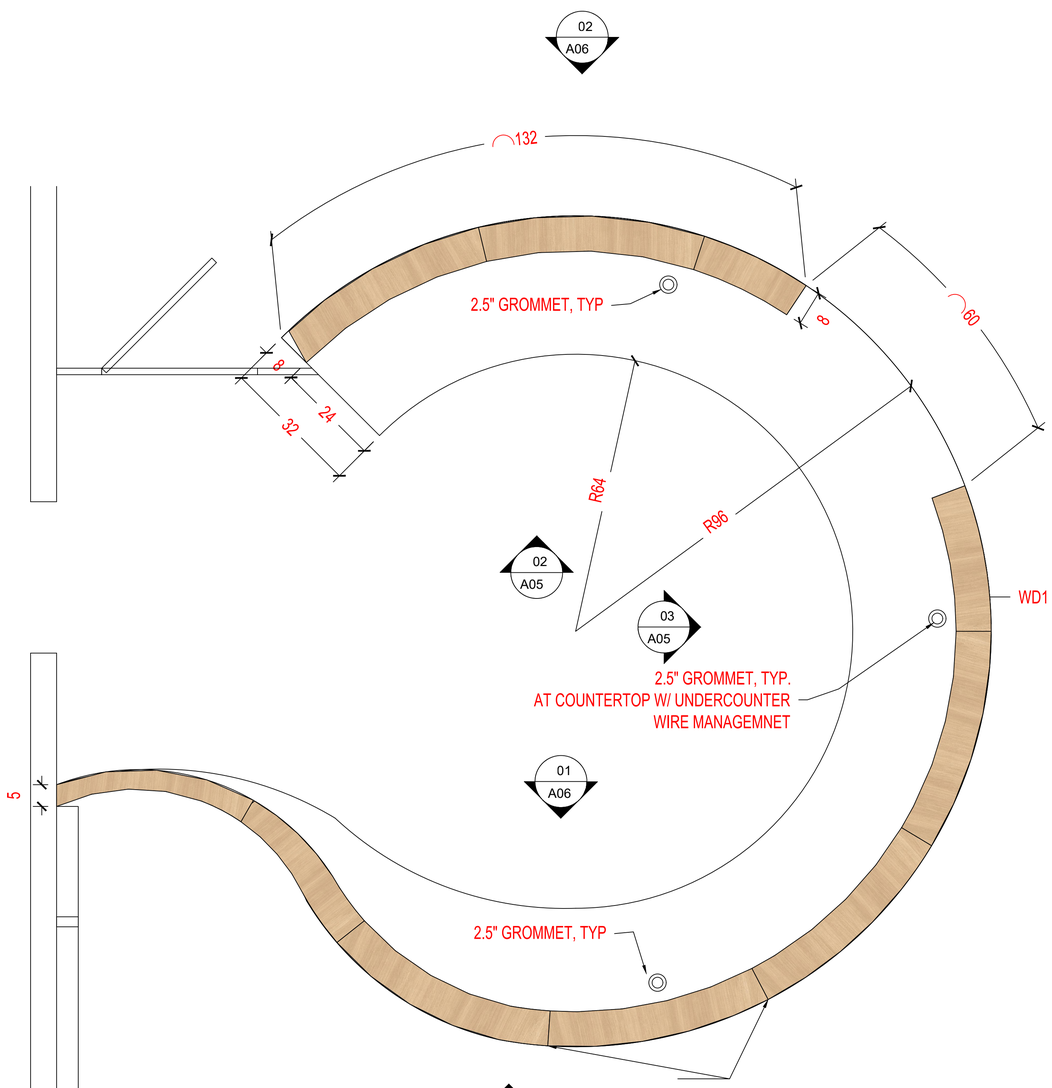

NOTE:
CONSTRUCTION
JOINTS AS NEEDED

1 PLAN - 101 LOBBY
ELEV. A8.02 - A8.03

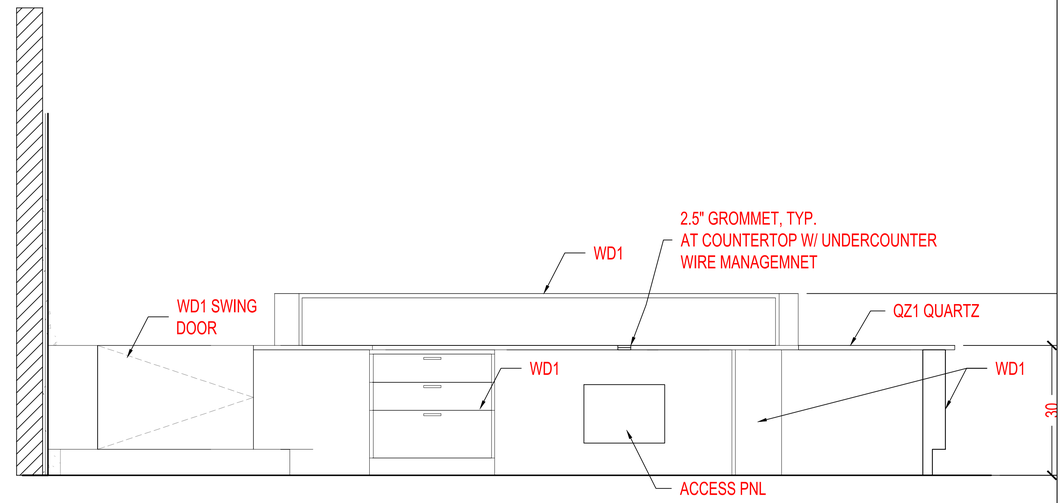

2 ELEVATION- 101 LOBBY
SCALE: 1/4" = 1'

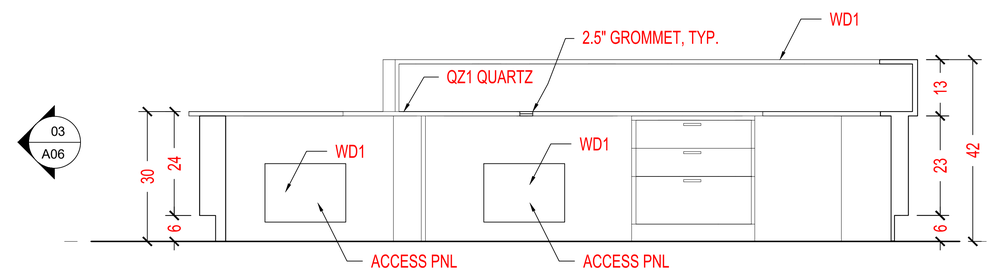

3 ELEVATION- 101 LOBBY
SCALE: 1/4" = 1'

4 ELEVATION- NICHE/BOOK DROP
SCALE: 1/4" = 1'

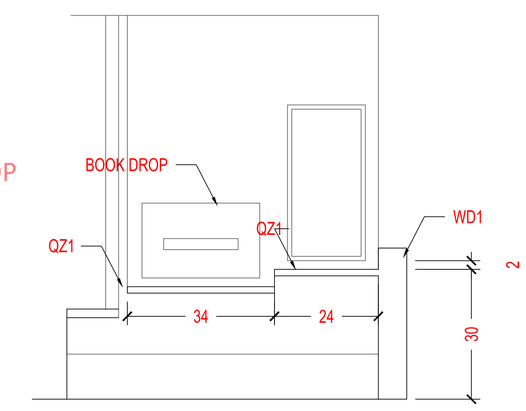

MANUFACTURER :
Signature CASEWORK
9144 KING ARTHUR DRIVE
Dallas, Texas 75247
Tel. 214-688-1966
Fax. 214-689-0787

PROJECT COVER SHEET:

Revision:

Drawn by:

Date:

Scale:

Drawning:

A12

9144 KING ARTHUR DR. DALLAS, TX. 75247

SAMPLE BREAK ROOM

LEVEL 1 - A1.04

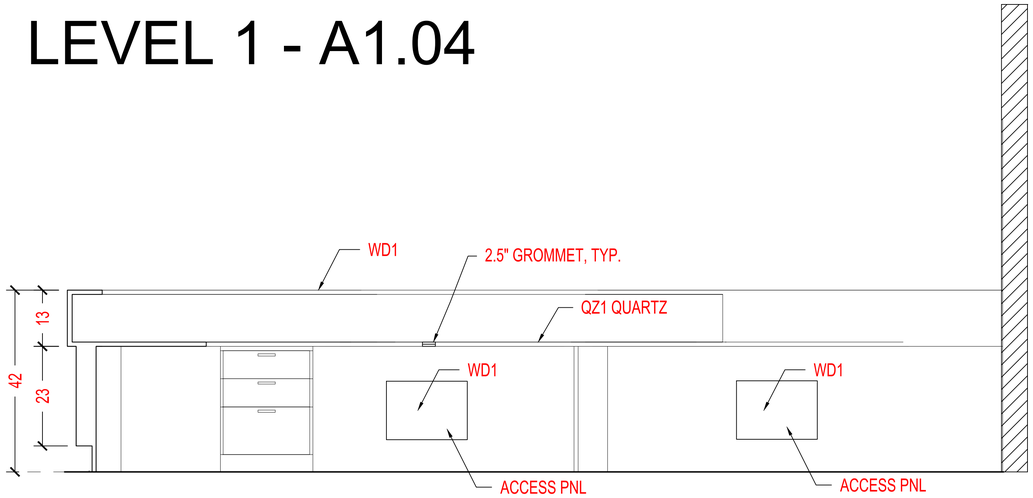

1 ELEVATION- 101 LOBBY
SCALE: 1/4" = 1'

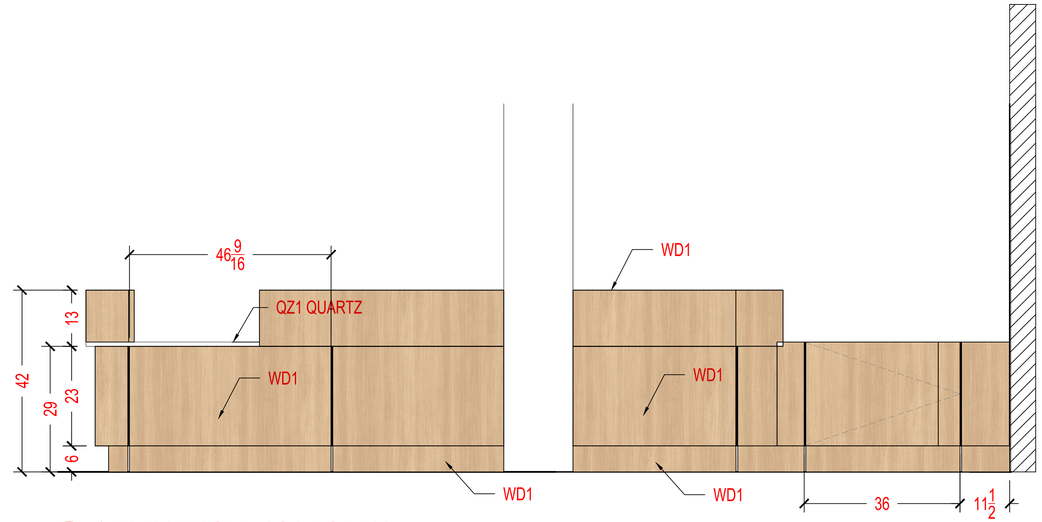

2 ELEVATION- 101 LOBBY
SCALE: 1/4" = 1'

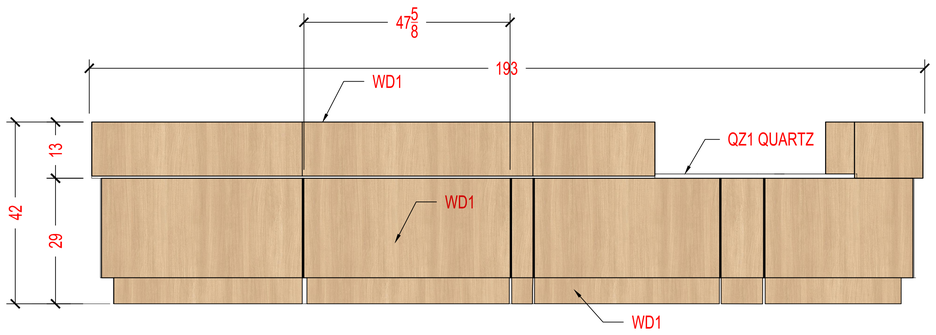

3 ELEVATION- 101 LOBBY
SCALE: 1/4" = 1'

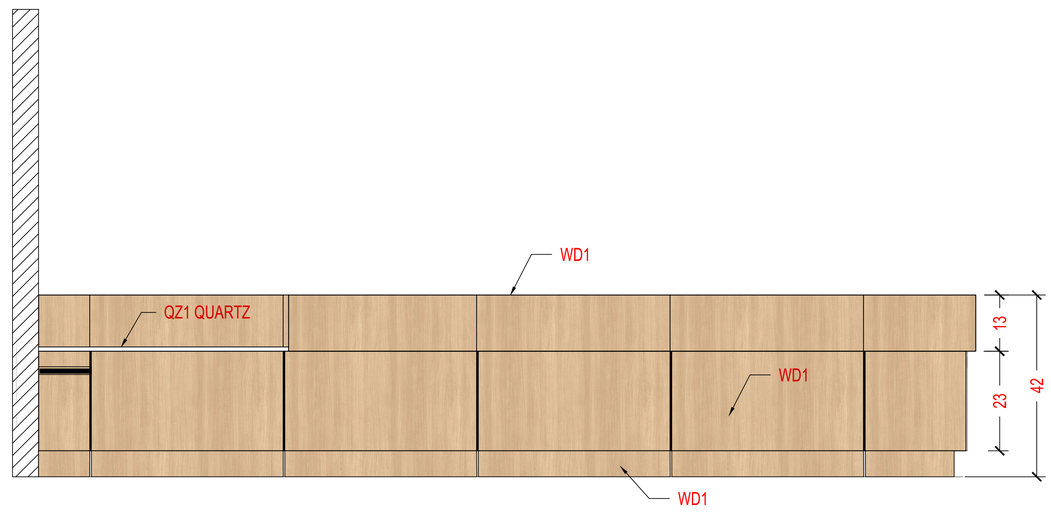

4 ELEVATION- 101 LOBBY
SCALE: 1/4" = 1'

MANUFACTURER :
Signature CASEWORK
9144 KING ARTHUR DRIVE
Dallas, Texas 75247
Tel. 214-688-1966
Fax. 214-689-0787

PROJECT COVER SHEET:

Revision:

Drawn by:

Date:

Scale:

Drawning:

A13

9144 KING ARTHUR DR. DALLAS, TX. 75247

SAMPLE BREAK ROOM

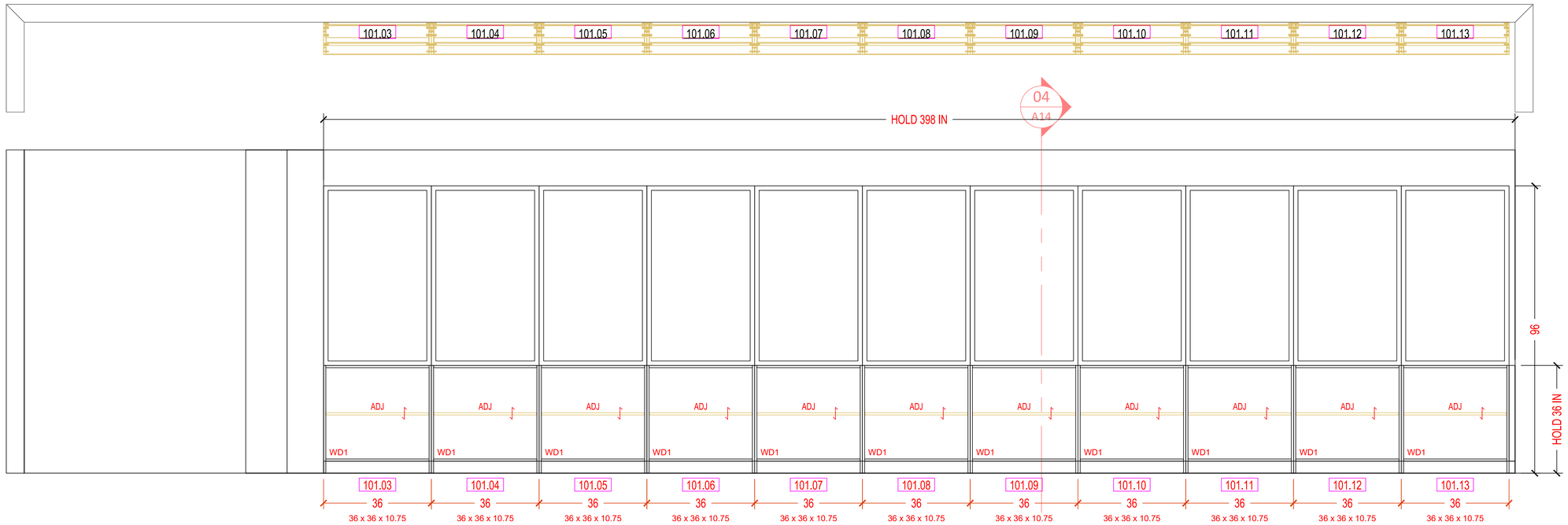

1 LOBBY BUILT-IN BOOKSHELVES 101
LEV 1 - ELEV 1/A7.12 - 4/A8.07 - NORTH

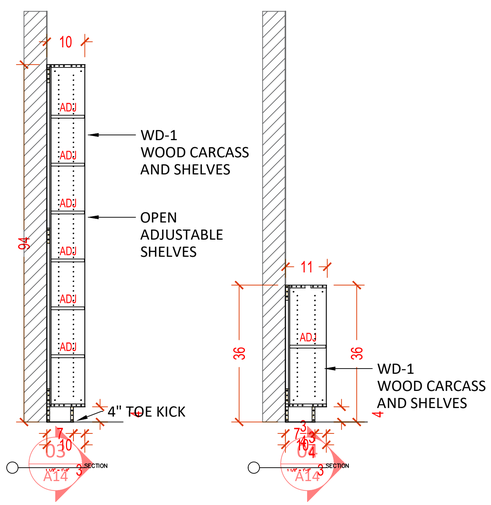

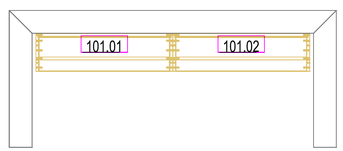

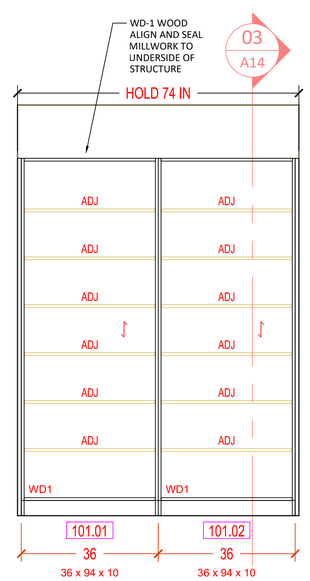

LEVEL 1 - A1.04

MANUFACTURER :
Signature CASEWORK
9144 KING ARTHUR DRIVE
Dallas, Texas 75247
Tel. 214-688-1966
Fax. 214-689-0787

PROJECT COVER SHEET:

Revision:

Drawn by:

Date:

Scale:

Drawning:

A14

9144 KING ARTHUR DR. DALLAS, TX. 75247

SAMPLE BREAK ROOM

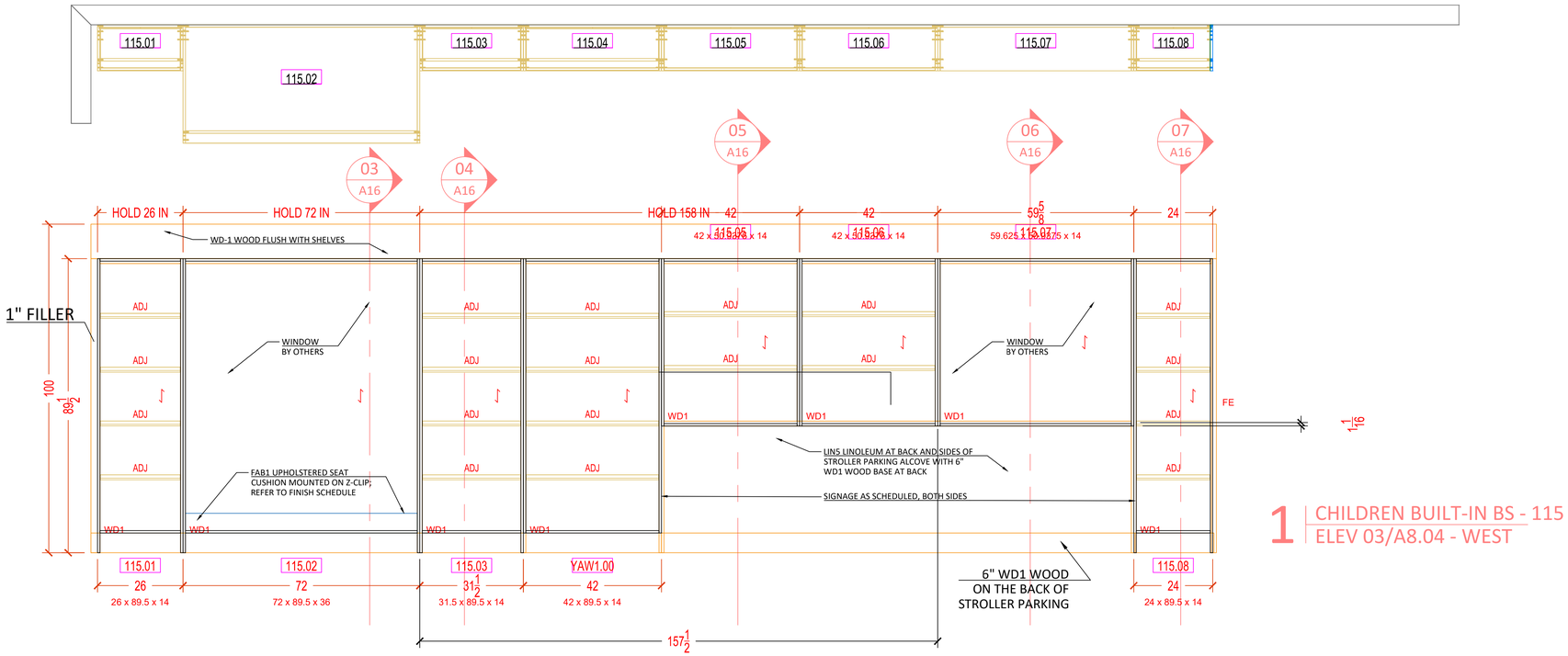

1 CHILDREN BUILT-IN BS - 115
ELEV 03/A8.04 - WEST

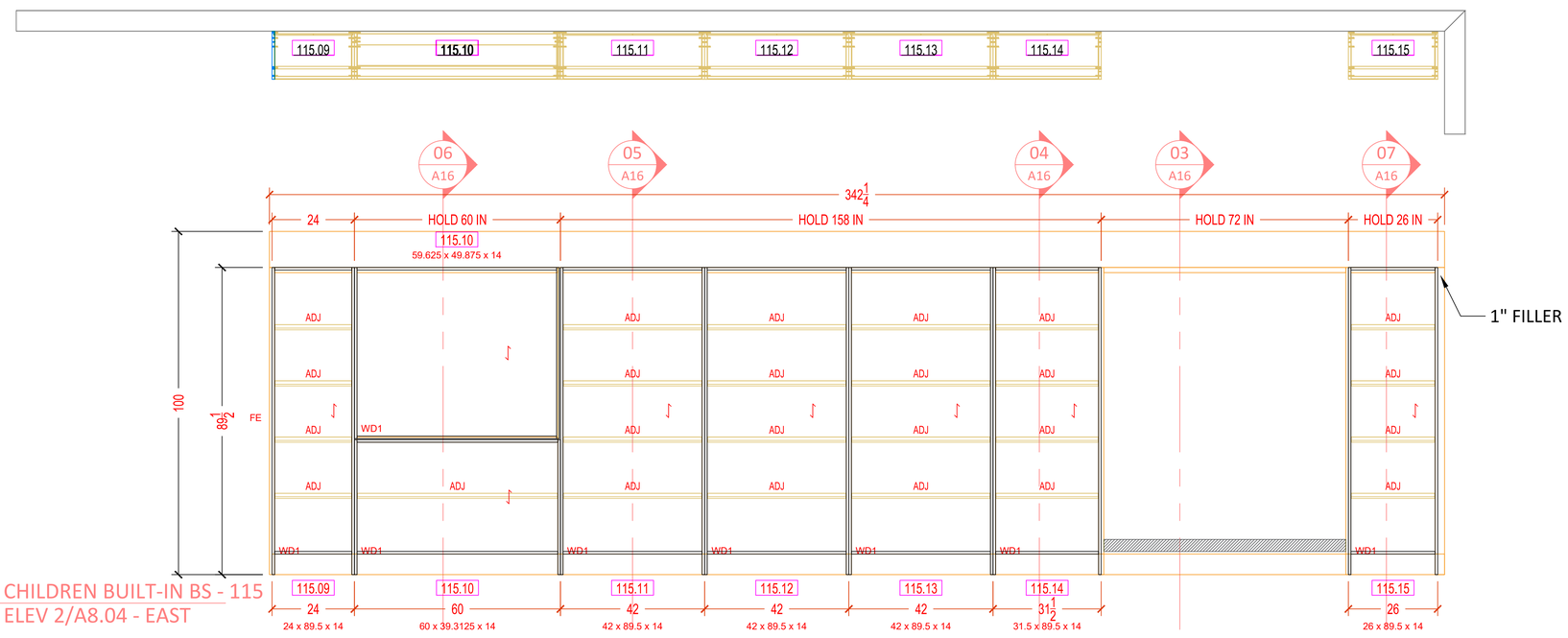

2 CHILDREN BUILT-IN BS - 115
ELEV 2/A8.04 - EAST

LEVEL 1 - A1.04

MANUFACTURER :
Signature CASEWORK
9144 KING ARTHUR DRIVE
Dallas, Texas 75247
Tel. 214-688-1966
Fax. 214-689-0787

PROJECT COVER SHEET:

Revision:

Drawn by:

Date:

Scale:

Drawning:

A15

9144 KING ARTHUR DR. DALLAS, TX. 75247

SAMPLE BREAK ROOM

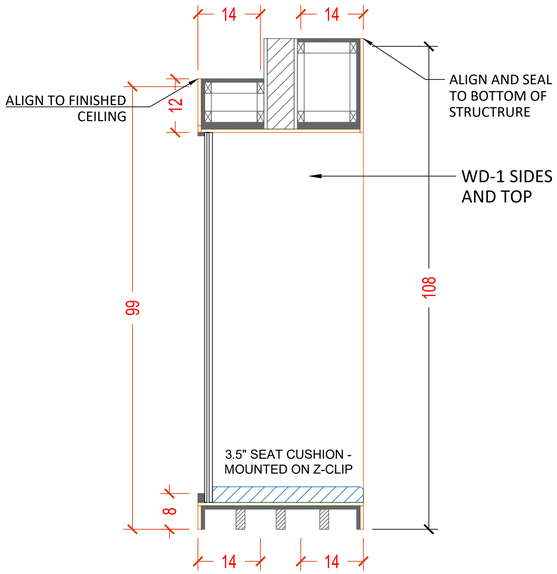

03 CHILDREN BUILT-IN BS - 115
ELEV 1/A8.05

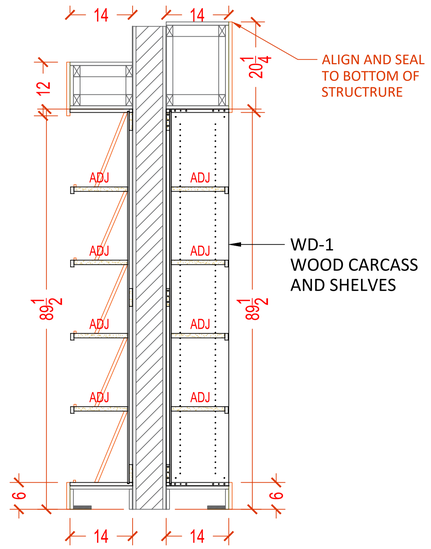

04 CHILDREN BUILT-IN BS - 115
ELEV 3/A8.05

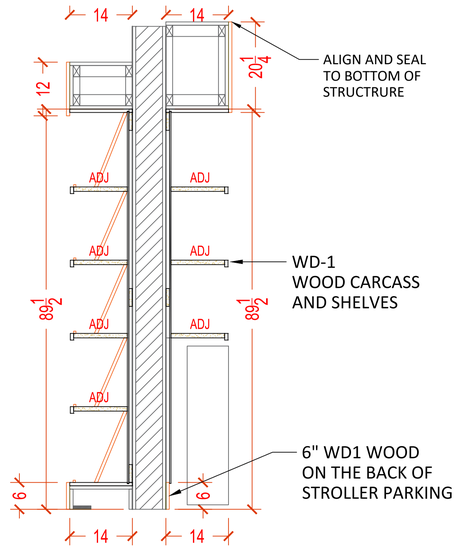

05 CHILDREN BUILT-IN BS - 115
ELEV 4/A8.05

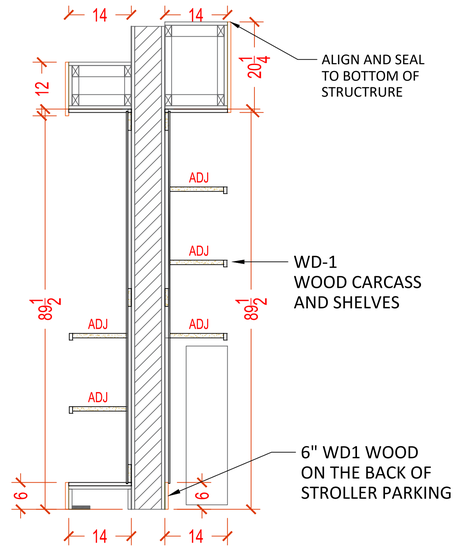

06 CHILDREN BUILT-IN BS - 115
ELEV 5/A8.05

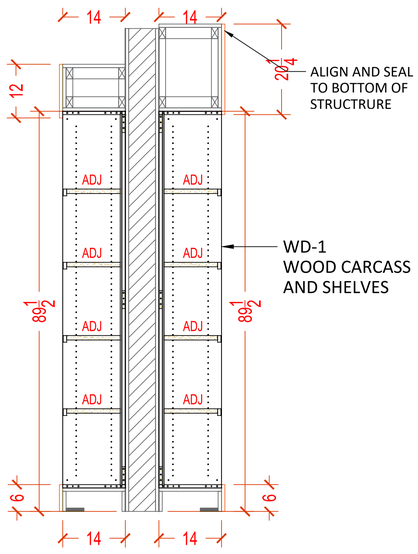

07 CHILDREN BUILT-IN BS - 115
ELEV 2/A8.05

LEVEL 1 - A1.04

MANUFACTURER :
Signature CASEWORK
9144 KING ARTHUR DRIVE
Dallas, Texas 75247
Tel. 214-688-1966
Fax. 214-689-0787

PROJECT COVER SHEET:

Revision:

Drawn by:

Date:

Scale:

Drawning:

A16

9144 KING ARTHUR DR. DALLAS, TX. 75247

SAMPLE BREAK ROOM

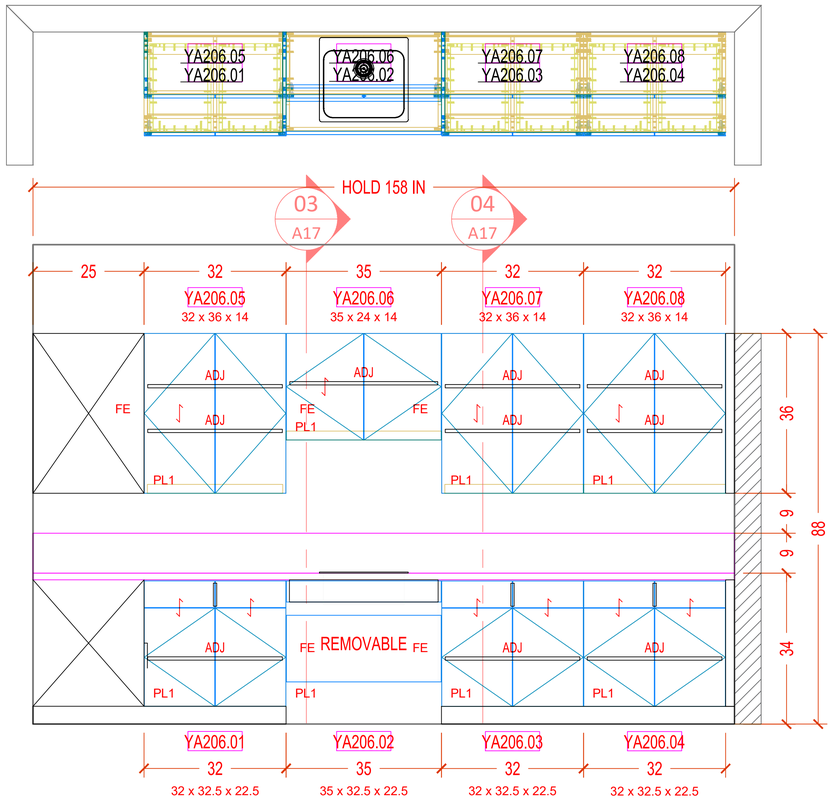

1 YA WORKROOM - ROOM: 206 S
ELEV. 14/A7.26 - 2/A8.14

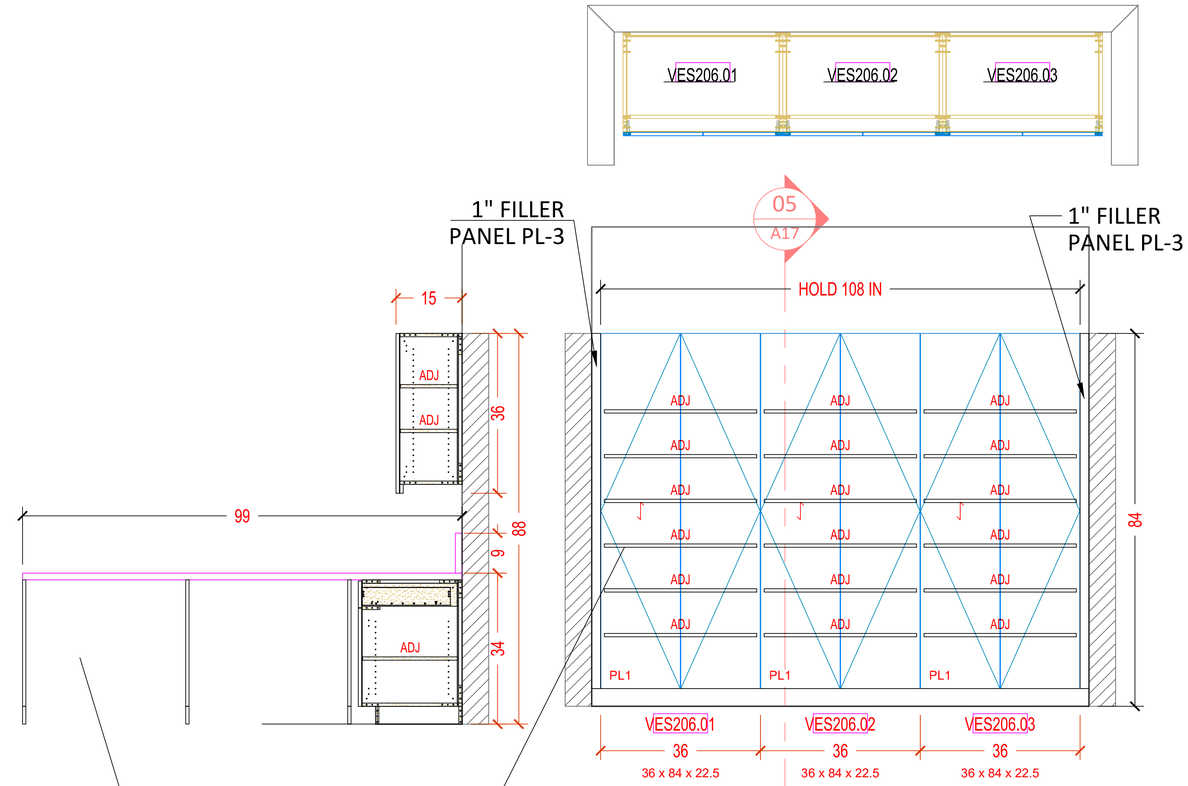

2 VESTIBULE - ROOM: 206A - SE
ELEV. 16/A7.26 - 4/A8.14

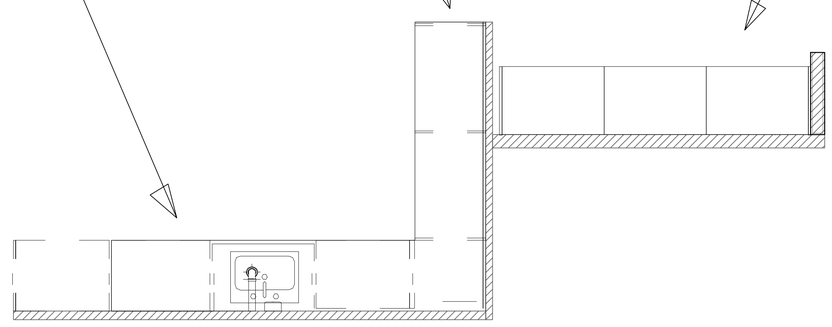

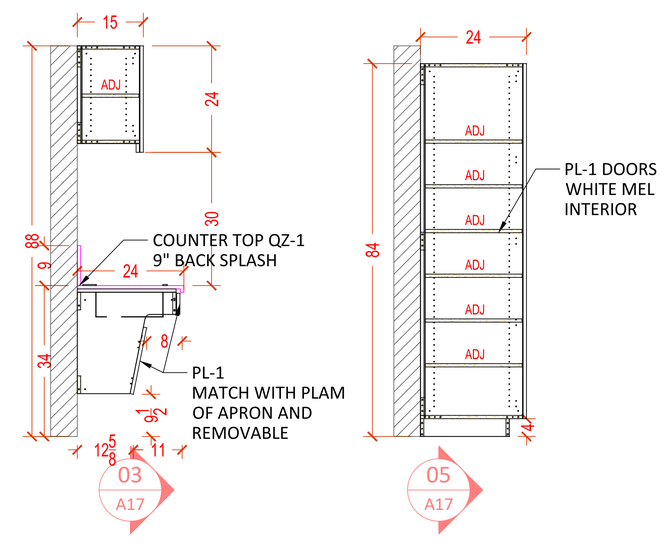

LEVEL 2 - A1.06

MANUFACTURER :
Signature CASEWORK
9144 KING ARTHUR DRIVE
Dallas, Texas 75247
Tel. 214-688-1966
Fax. 214-689-0787

PROJECT COVER SHEET:

Revision:

Drawn by:

Date:

Scale:

Drawning:

A17

9144 KING ARTHUR DR. DALLAS, TX. 75247

SAMPLE BREAK ROOM

ALL VANITY: P-LAM - FORMICA- COLORCORE #J0032 - BIANCO KOS
ALL COUNTERTOP - QZ-2 - WILSONART QUARTZ #Q2024 VIA AUGUSTA

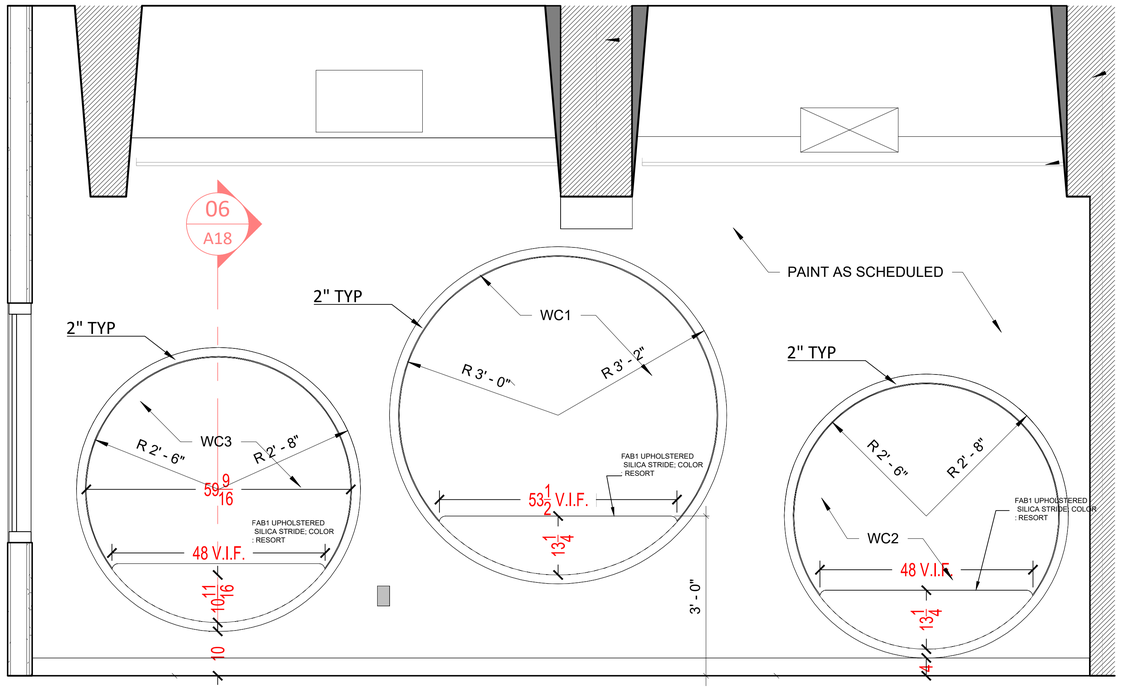

1 TEEN READING NOOK - 202
LEV 2 - ELEV 4/A7.24 - A7.25

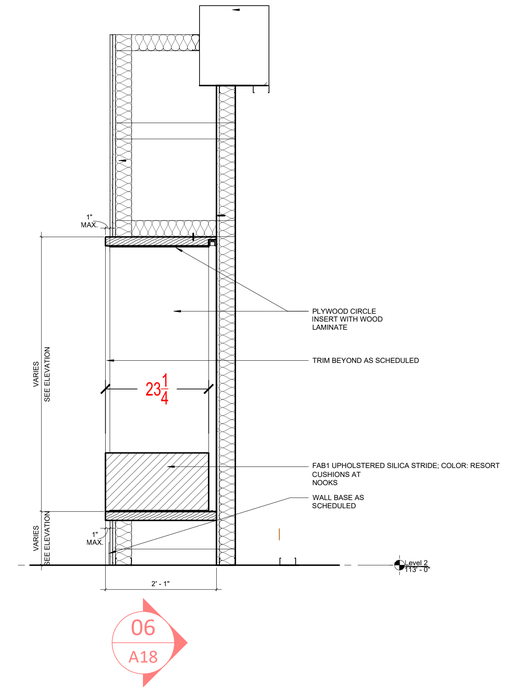

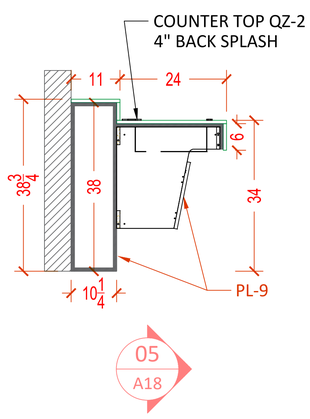

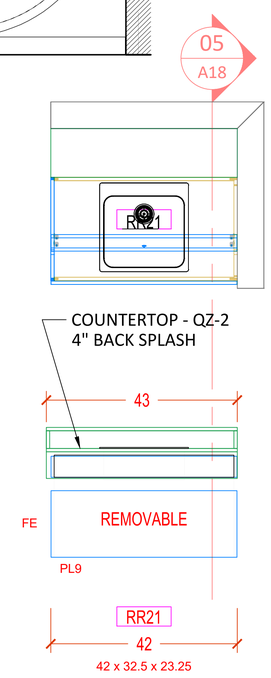

2 TOILET RR21 - A8.19
LEV 2 - ELEV. 1/A4.14

BOX: W: 43" H: 38" D: 10 1/4"

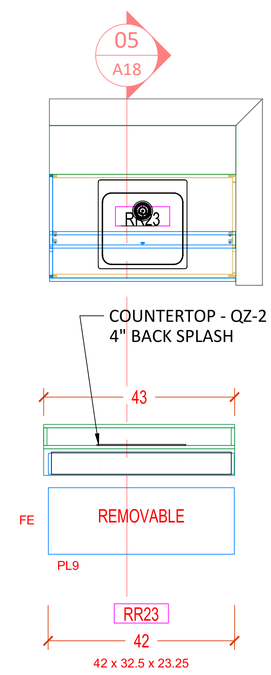

3 FAMILY TOILET RR23
LEV 2 - 1/A4.14 - A8.19

BOX: W: 43" H: 38" D: 10 1/4"

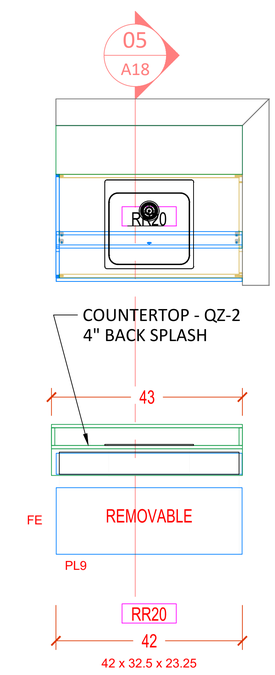

4 ADA TOILET RR20 - A8.19
LEV 2 - ELEV. 1/A4.14

BOX: W: 43" H: 38" D: 10 1/4"

LEVEL 2 - A1.06

MANUFACTURER :
Signature CASEWORK
9144 KING ARTHUR DRIVE
Dallas, Texas 75247
Tel. 214-688-1966
Fax. 214-689-0787

PROJECT COVER SHEET:

Revision:

Drawn by:

Date:

Scale:

Drawning:

A18

9144 KING ARTHUR DR. DALLAS, TX. 75247

SAMPLE BREAK ROOM

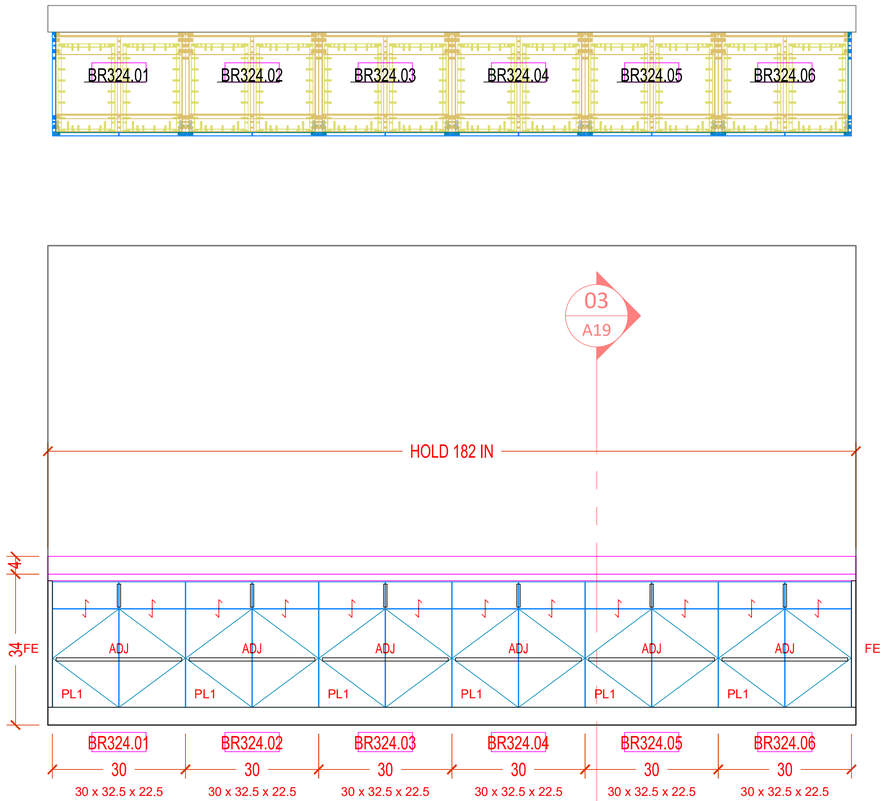

1 STAFF BREAKROOM 324 - WEST
ELEV. 11/A7.39 - 3/A8.15

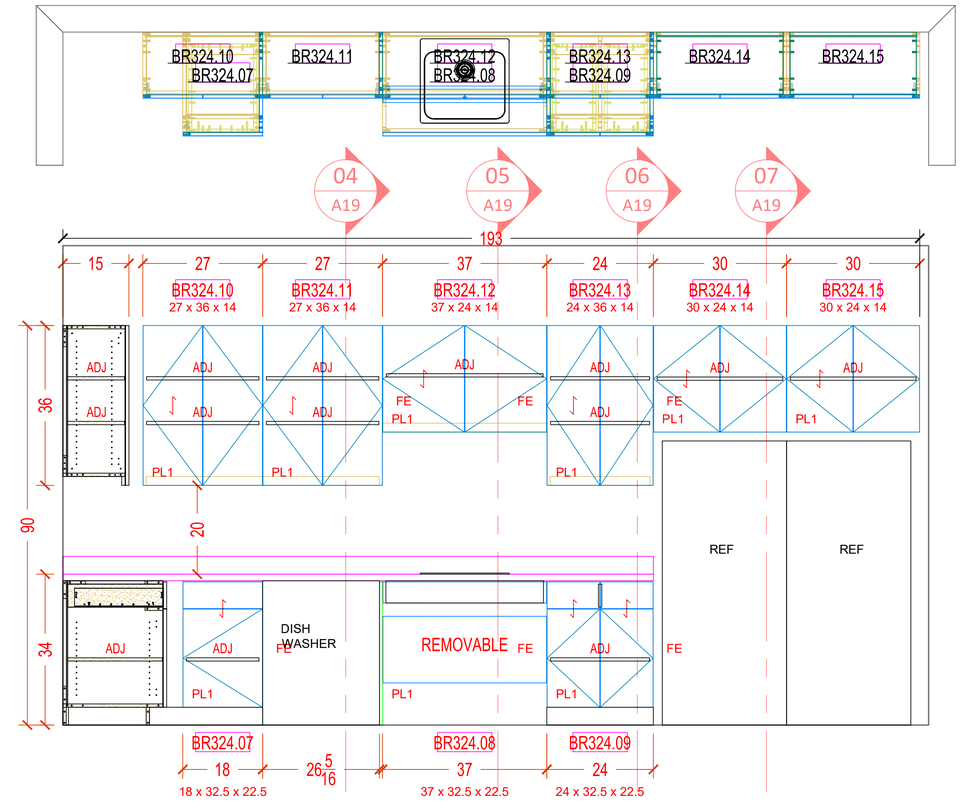

2 STAFF BREAKROOM 324 - EAST
ELEV. 3/A7.39 - 2/A8.16

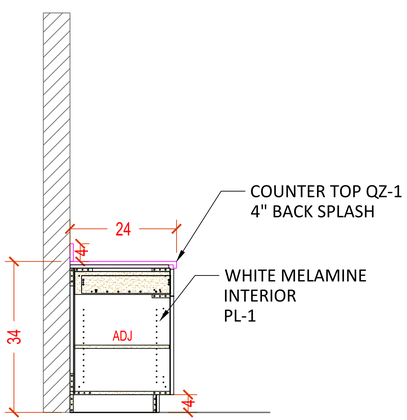

03
A19

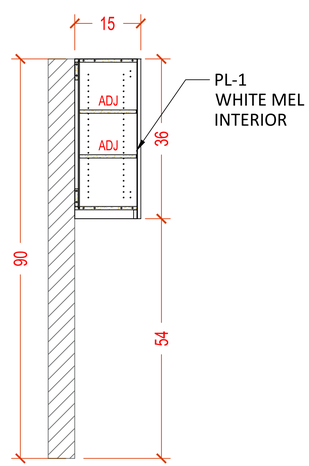

04
A19

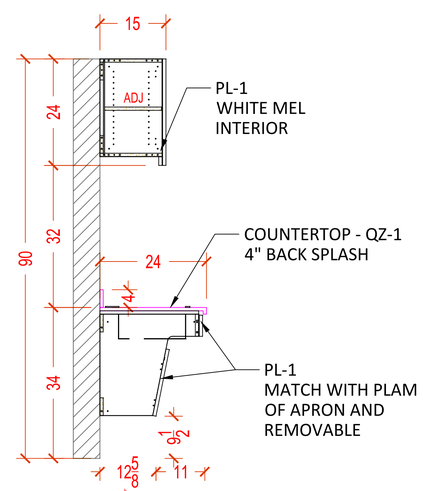

05
A19

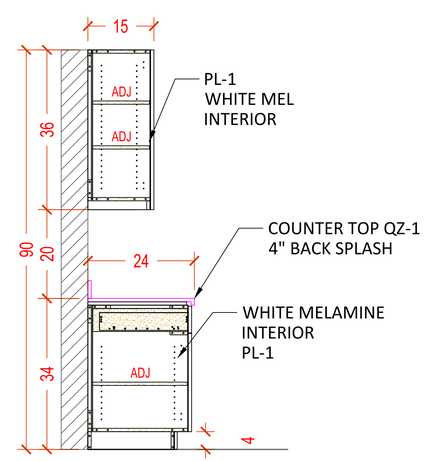

06
A19

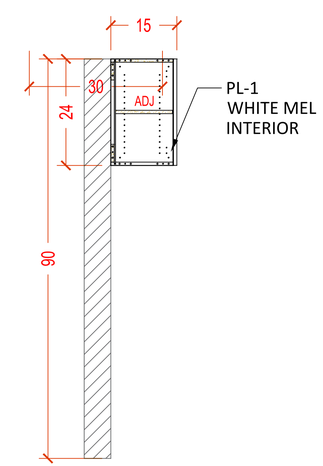

07
A19

LEVEL 3 - A1.08

MANUFACTURER :
Signature CASEWORK
9144 KING ARTHUR DRIVE
Dallas, Texas 75247
Tel. 214-688-1966
Fax. 214-689-0787

PROJECT COVER SHEET:

Revision:

Drawn by:

Date:

Scale:

Drawning:

A19

9144 KING ARTHUR DR. DALLAS, TX. 75247

SAMPLE BREAK ROOM

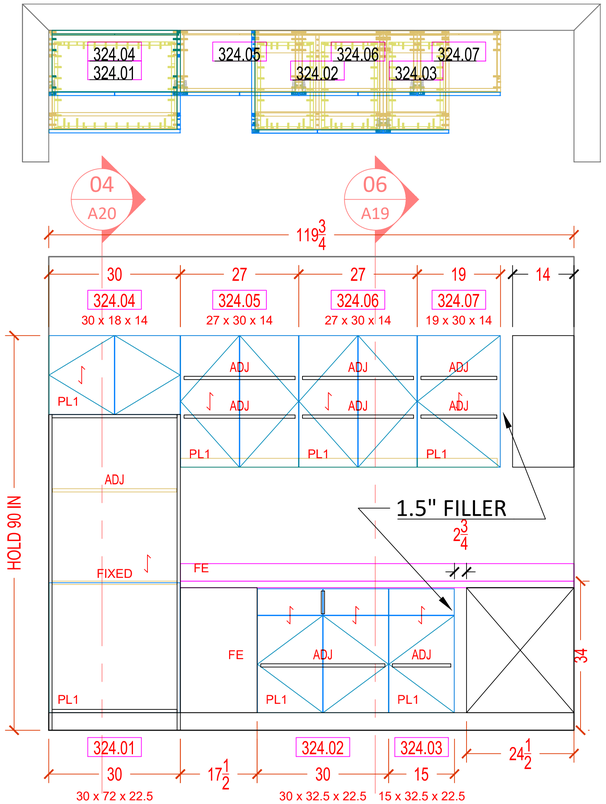

1 STAFF BREAKROOM 324 - NORTH
ELEV 2/A7.39 - 3/A8.16

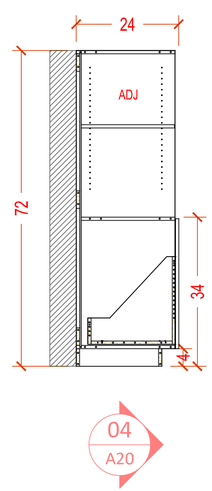

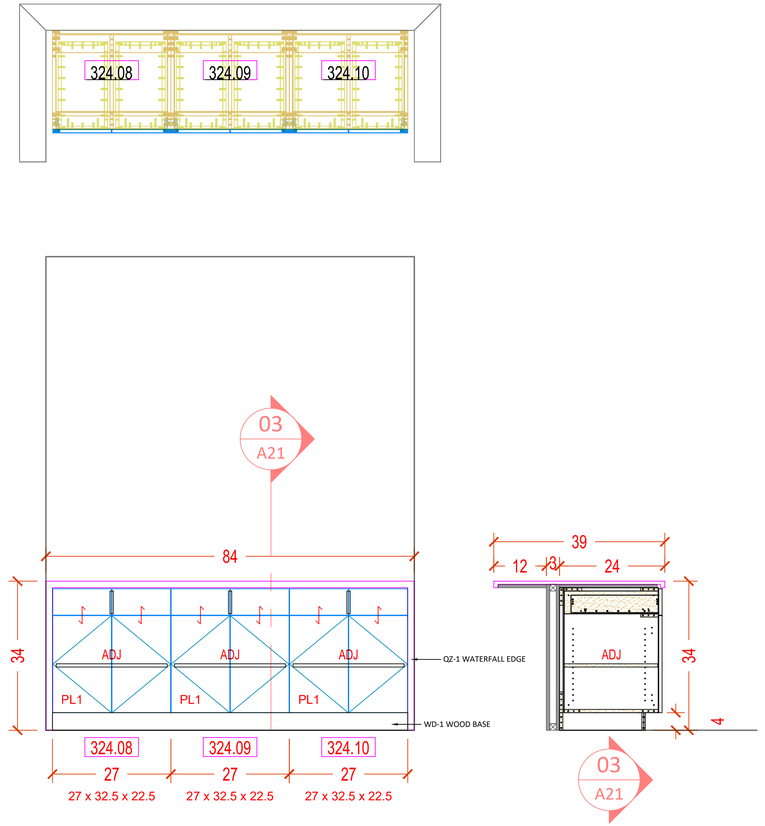

2 STAFF BREAKROOM 324 - ISLAND
ELEV. 5/A7.39 - 4/A8.16

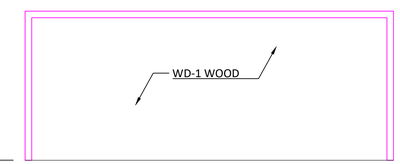

LEVEL 3 - A1.08

MANUFACTURER :
Signature CASEWORK
9144 KING ARTHUR DRIVE
Dallas, Texas 75247
Tel. 214-688-1966
Fax. 214-689-0787

PROJECT COVER SHEET:

Revision:

Drawn by:

Date:

Scale:

Drawning:

A20

9144 KING ARTHUR DR. DALLAS, TX. 75247

SAMPLE BREAK ROOM

ALL VANITY: P-LAM - FORMICA- COLORCORE #J0032 - BIANCO KOS
ALL COUNTERTOP - QZ-2 - WILSONART QUARTZ #Q2024 VIA AUGUSTA

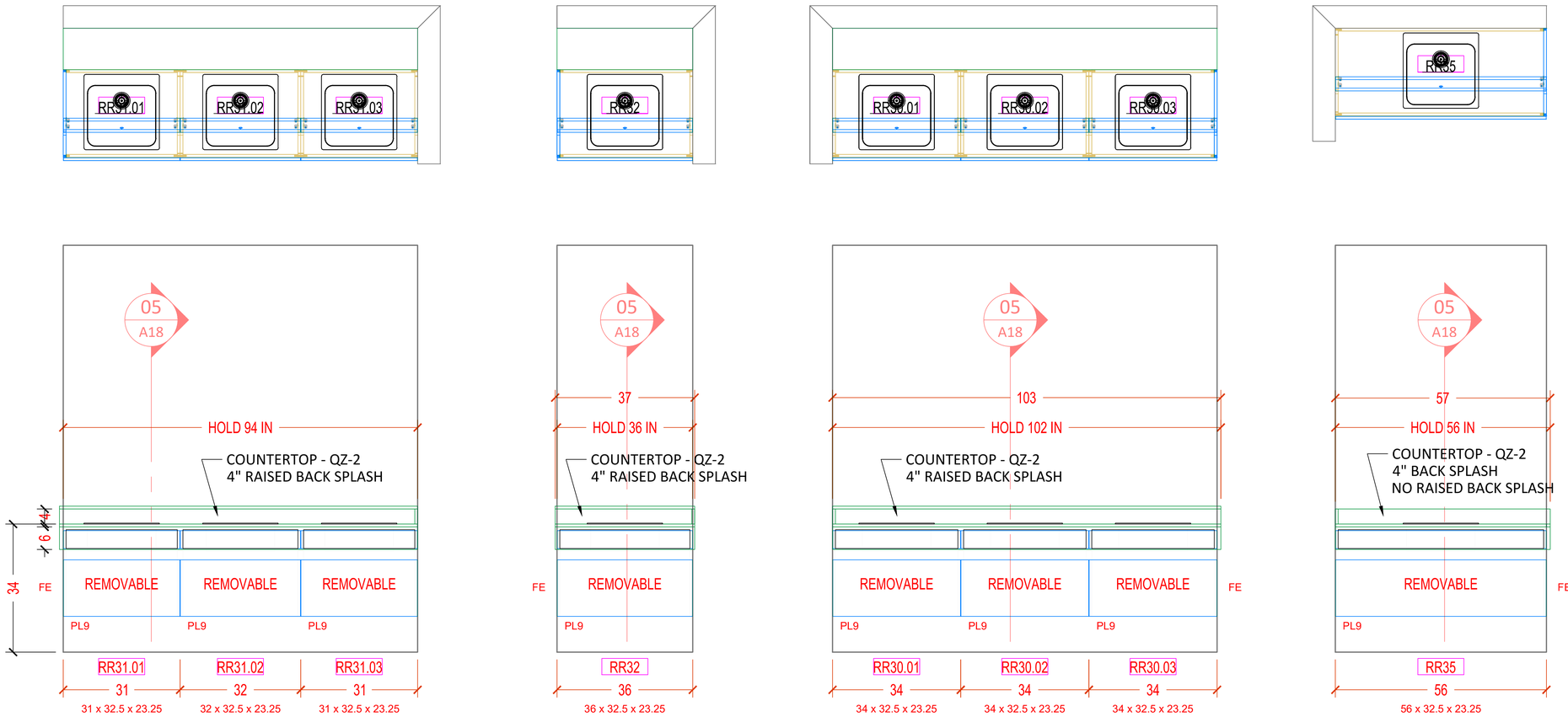

1 MEN'S RR31 - LEV 3
ELEV. 1/A4.15 - A8.19

BOX: W: 95" H: 38" D: 10 $\frac{1}{4}$"

2 ADA TOILET - RR32 - LEV 3
ELEV. 1/A4.15 - A8.19

BOX: W: 37 1/2" H: 38" D: 10 $\frac{1}{4}$"

3 WOMEN RR30 - LEV 3
ELEV. 1/A4.15 - A8.19

BOX: W: 103" H: 38" D: 10 $\frac{1}{4}$"

4 MOTHER'S ROOM RR35 - LEV 3
ELEV. 1/A1.08 - A8.19

BOX: W: 57" H: 38" D: 10 $\frac{1}{4}$"

LEVEL 3 - A1.08

MANUFACTURER :
Signature CASEWORK
9144 KING ARTHUR DRIVE
Dallas, Texas 75247
Tel. 214-688-1966
Fax. 214-689-0787

PROJECT COVER SHEET:

9144 KING ARTHUR DR. DALLAS, TX. 75247

SAMPLE BREAK ROOM

Revision:

Drawn by:

Date:

Scale:

Drawning:

A21

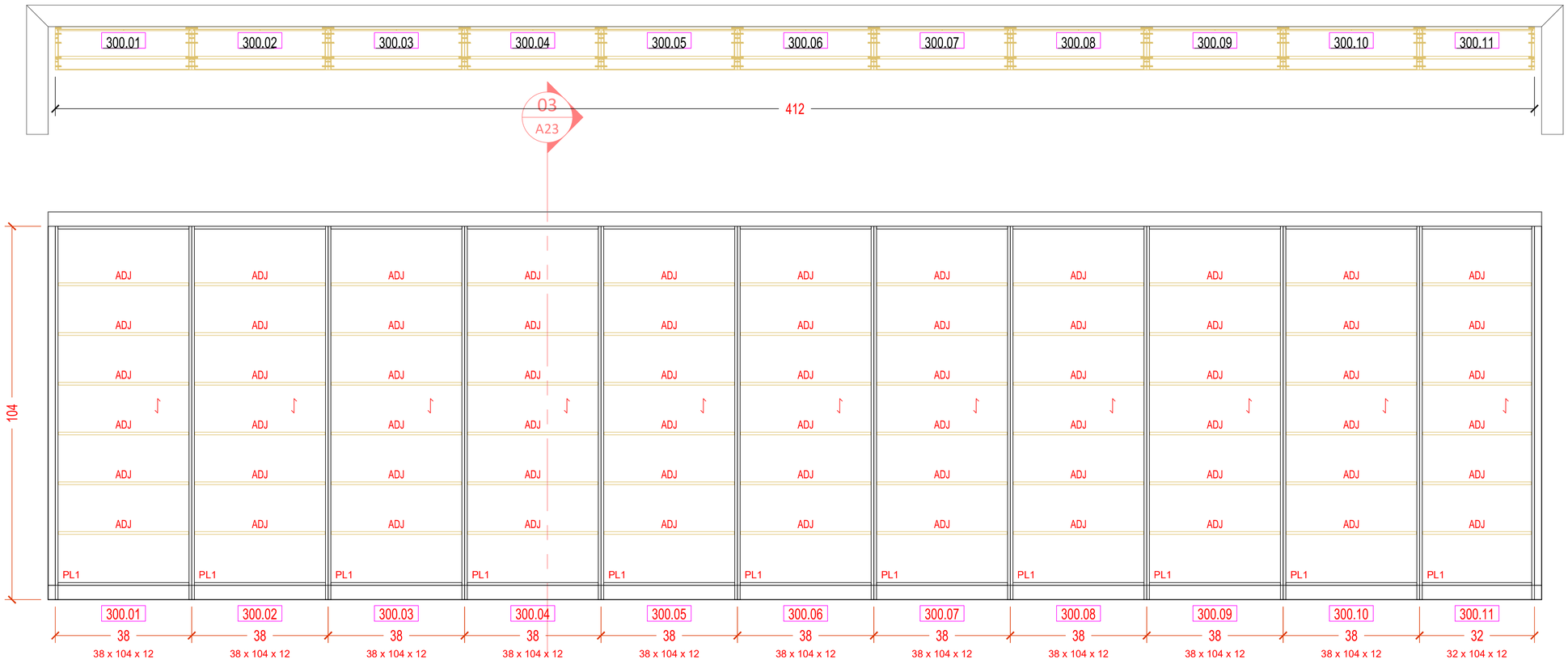

1 ADULT 300 BK - SOUTH 403
ELEV. 5/A7.31 -

LEVEL 3 - A1.08

MANUFACTURER :
Signature CASEWORK
9144 KING ARTHUR DRIVE
Dallas, Texas 75247
Tel. 214-688-1966
Fax. 214-689-0787

PROJECT COVER SHEET:

9144 KING ARTHUR DR. DALLAS, TX. 75247

SAMPLE BREAK ROOM

Revision:

Drawn by:

Date:

Scale:

Drawning:

A22

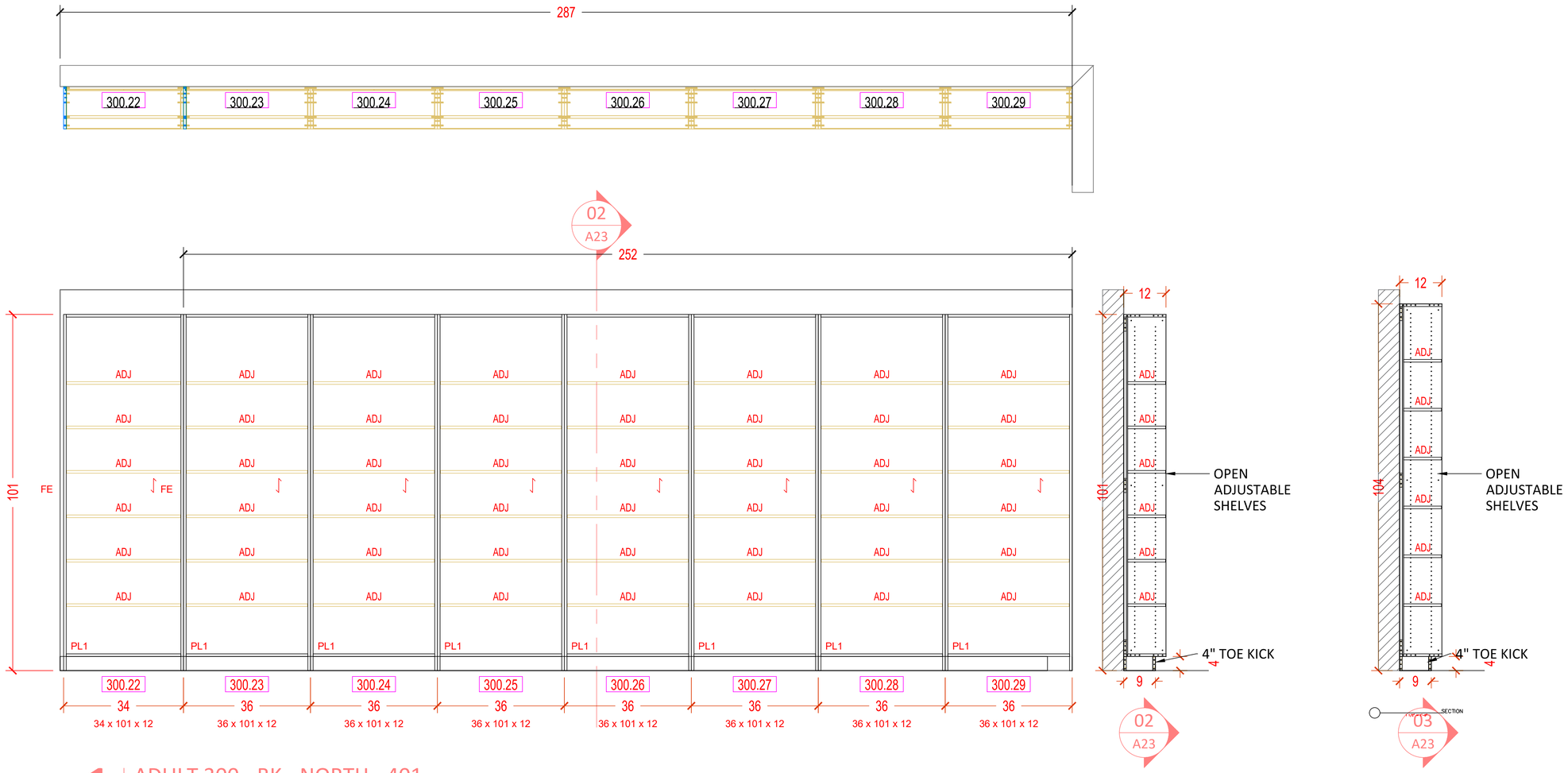

1 ADULT 300 - BK - NORTH - 401
ELEV. 3/A7.31

LEVEL 3 - A1.08

MANUFACTURER :
Signature CASEWORK
9144 KING ARTHUR DRIVE
Dallas, Texas 75247
Tel. 214-688-1966
Fax. 214-689-0787

PROJECT COVER SHEET:

Revision:

Drawn by:

Date:

Scale:

Drawning:

A23

9144 KING ARTHUR DR. DALLAS, TX. 75247

SAMPLE BREAK ROOM

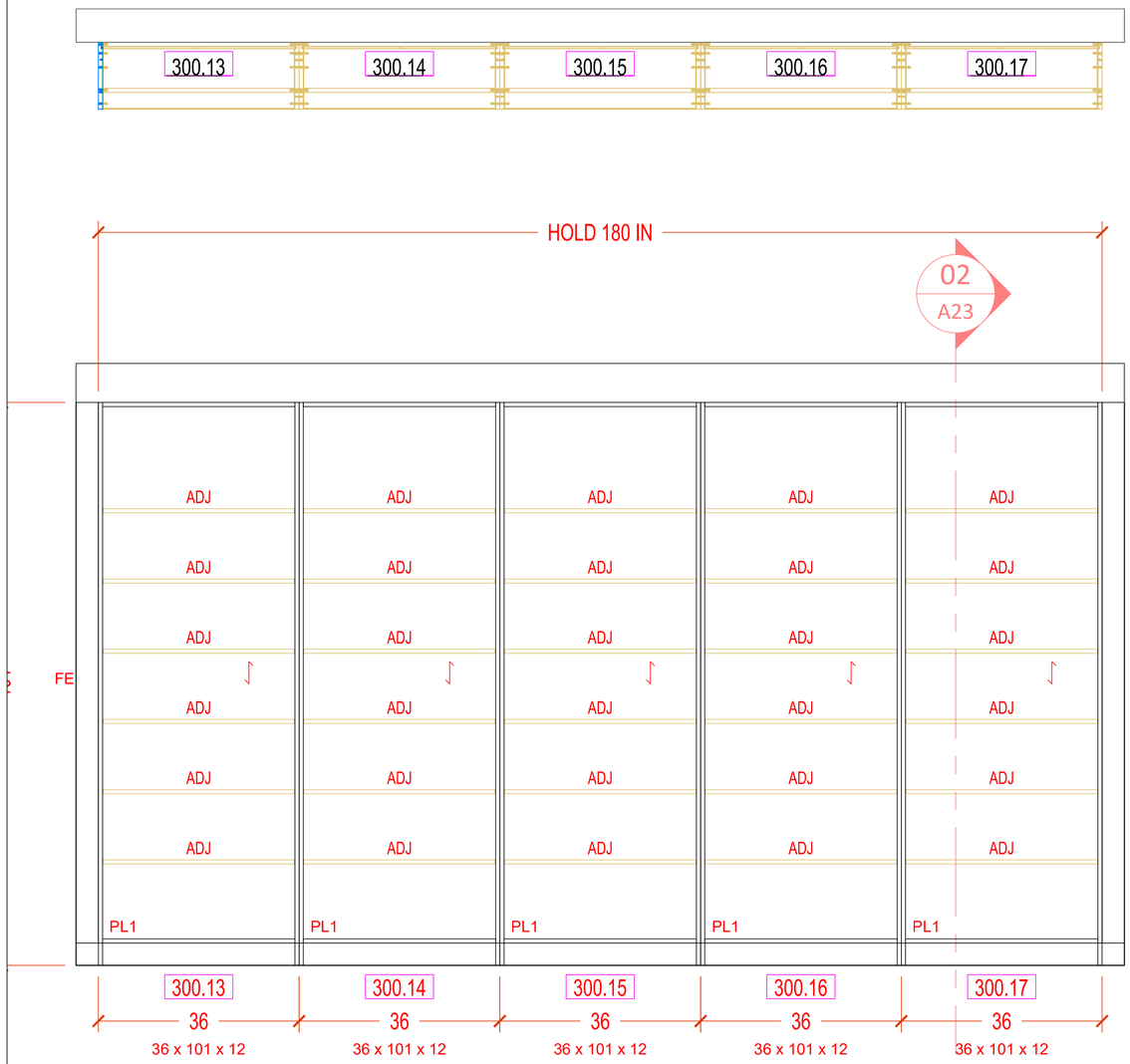

1 ADULT 300 - BK - WEST - 401
ELEV. 6/A7.31

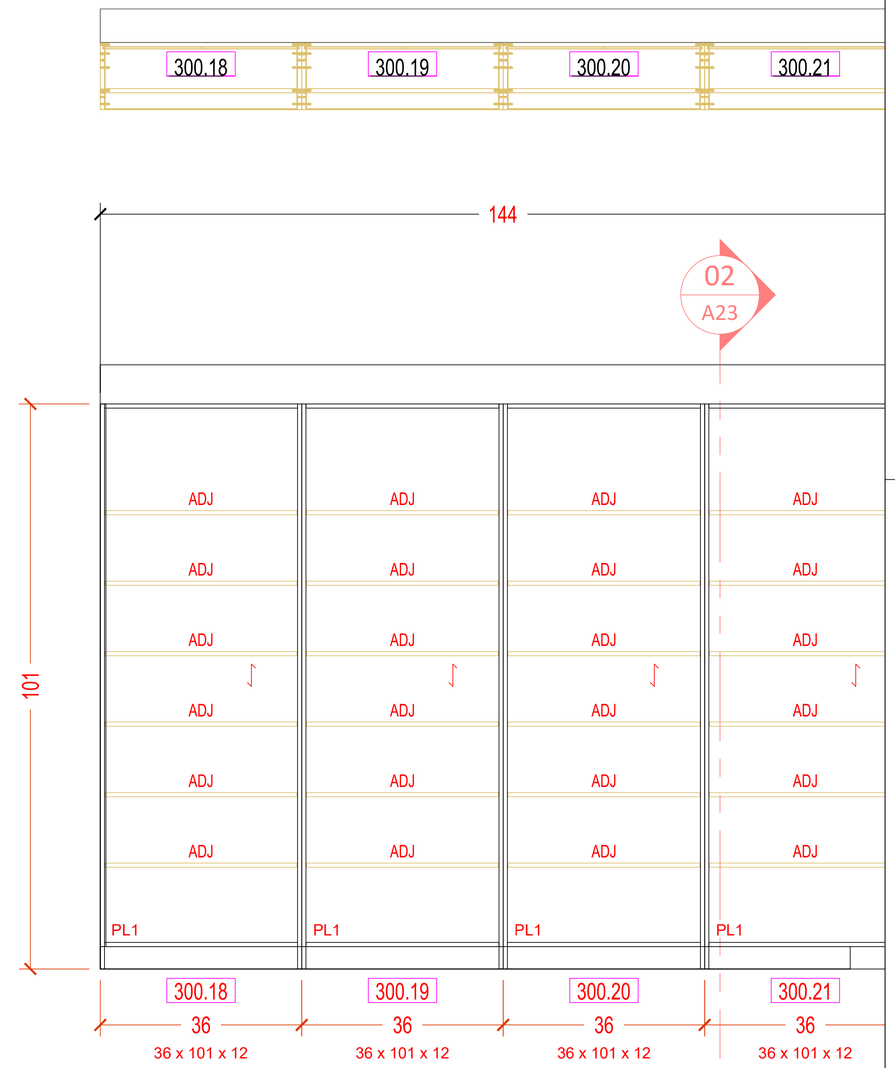

2 ADULT 300 - BK - NW - 401
ELEV. 2/A7.31

LEVEL 3 - A1.08

MANUFACTURER :
Signature CASEWORK
9144 KING ARTHUR DRIVE
Dallas, Texas 75247
Tel. 214-688-1966
Fax. 214-689-0787

PROJECT COVER SHEET:

9144 KING ARTHUR DR. DALLAS, TX. 75247

SAMPLE BREAK ROOM

Revision:

Drawn by:

Date:

Scale:

Drawning:

A24

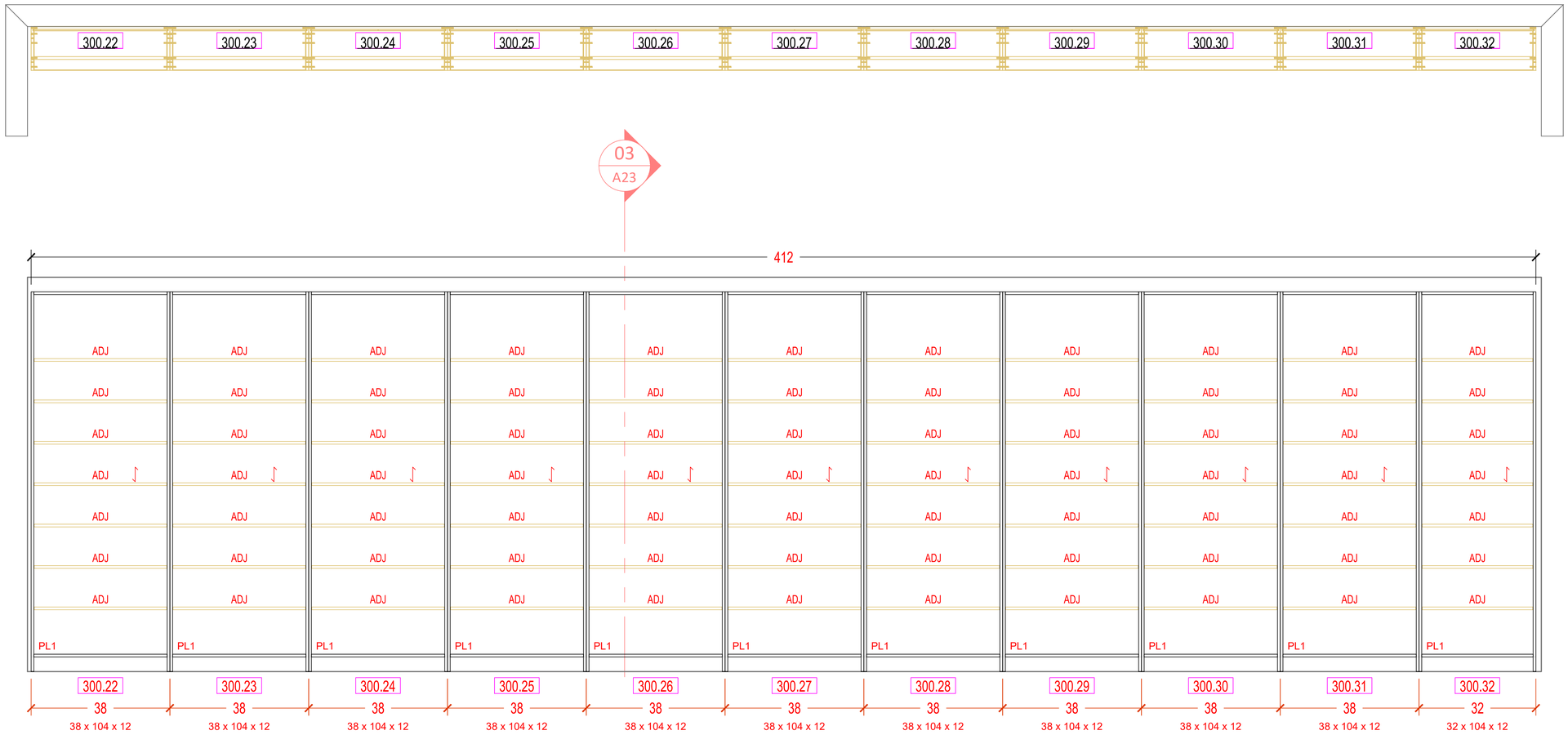

1 ADULT 300 BK - SOUTH-EAST 403
ELEV. 5/A7.33

LEVEL 3 - A1.08

MANUFACTURER :
Signature CASEWORK
9144 KING ARTHUR DRIVE
Dallas, Texas 75247
Tel. 214-688-1966
Fax. 214-689-0787

PROJECT COVER SHEET:

Revision:

Drawn by:

Date:

Scale:

Drawning:

A25

9144 KING ARTHUR DR. DALLAS, TX. 75247

SAMPLE BREAK ROOM

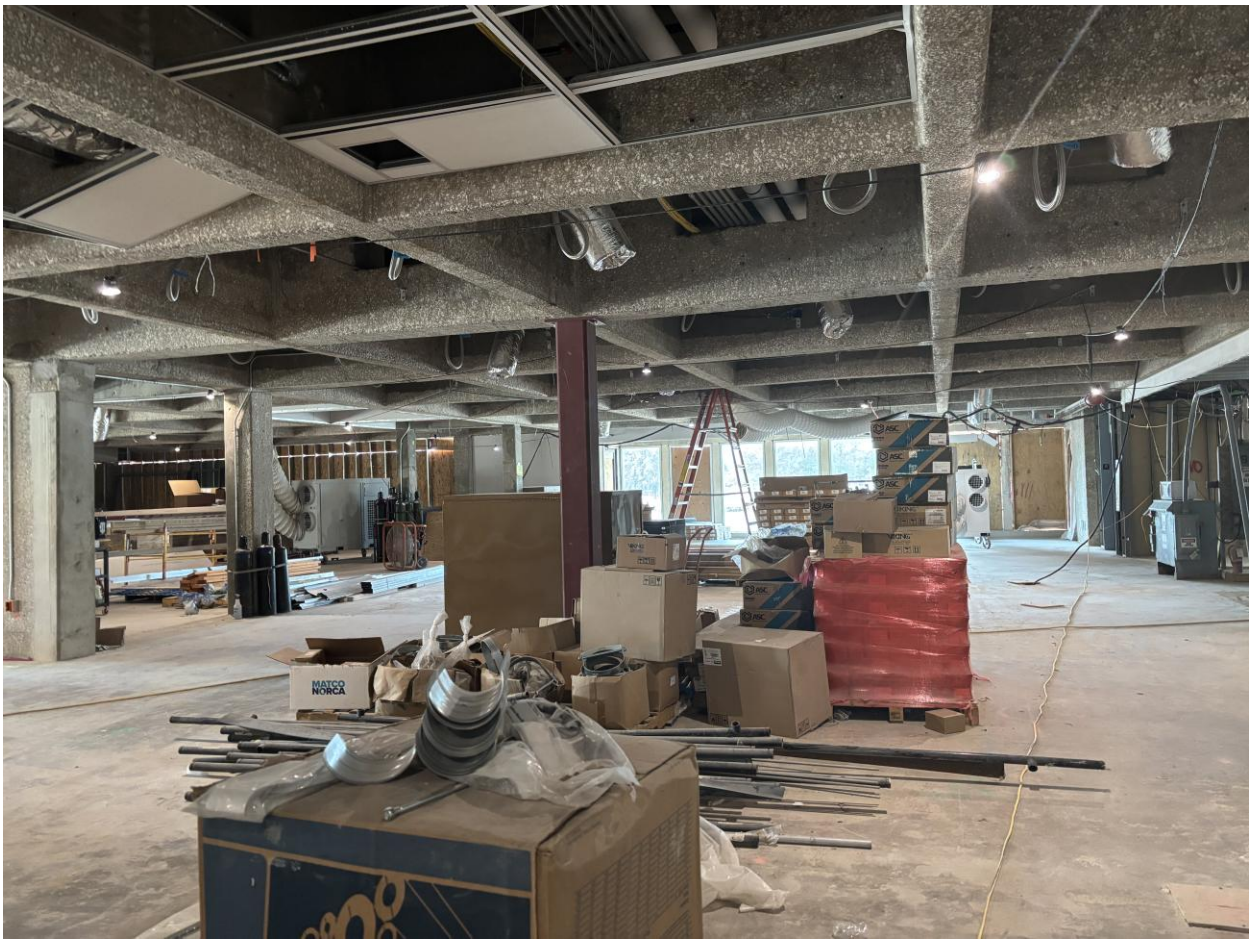
MATCO
NORCA

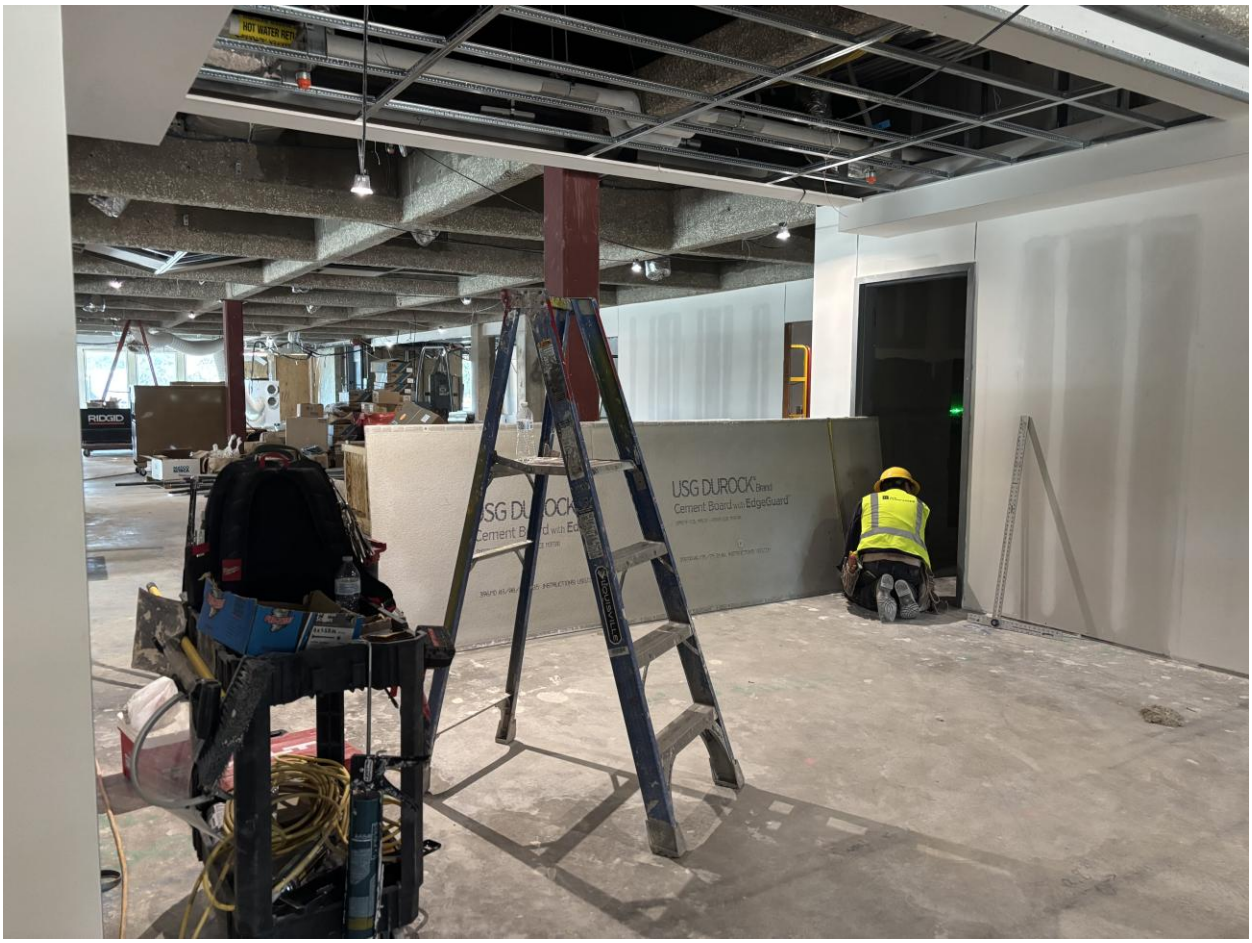
HOT WATER
RIDGID
USG DUROCK Brand
Cement Board with EdgeGuard

96
DANGER
HIGH
VOLTAGE

BLOCKING
AGL
41 8½"
8.4"

FIRE
EXTINGUISHER

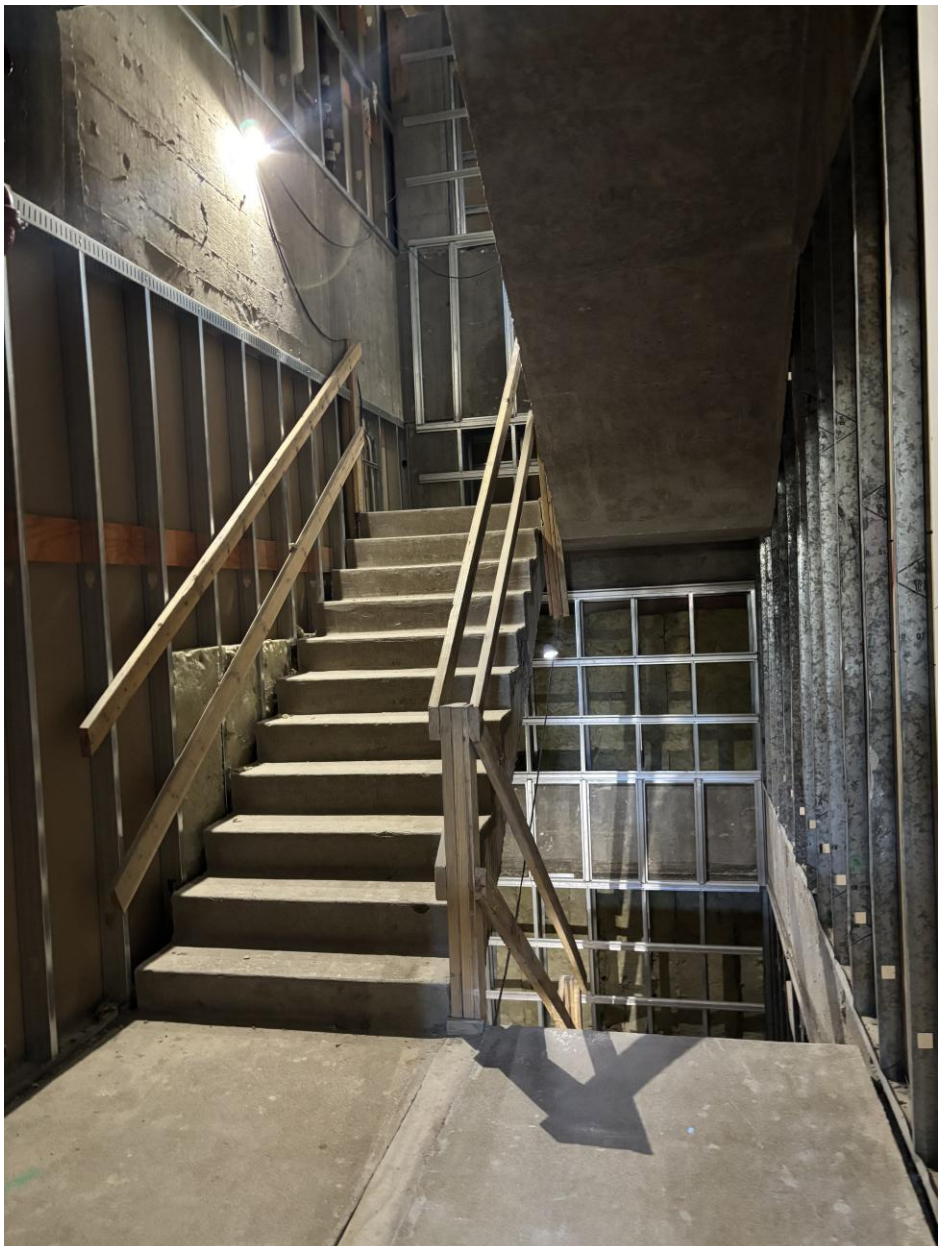

USG DURO
Cement Board
EdgeGuard

USG DUROCK® Brand
Cement Board with EdgeGuard™
USG DURO
Cement Board w
396KB 08/17/24 1115 INSTRUCTIONS

FRAGILE
THIS
SIDE
UP
HANDLE
WITH
CARE
FRAGILE

Owens Corning
Owens Corning

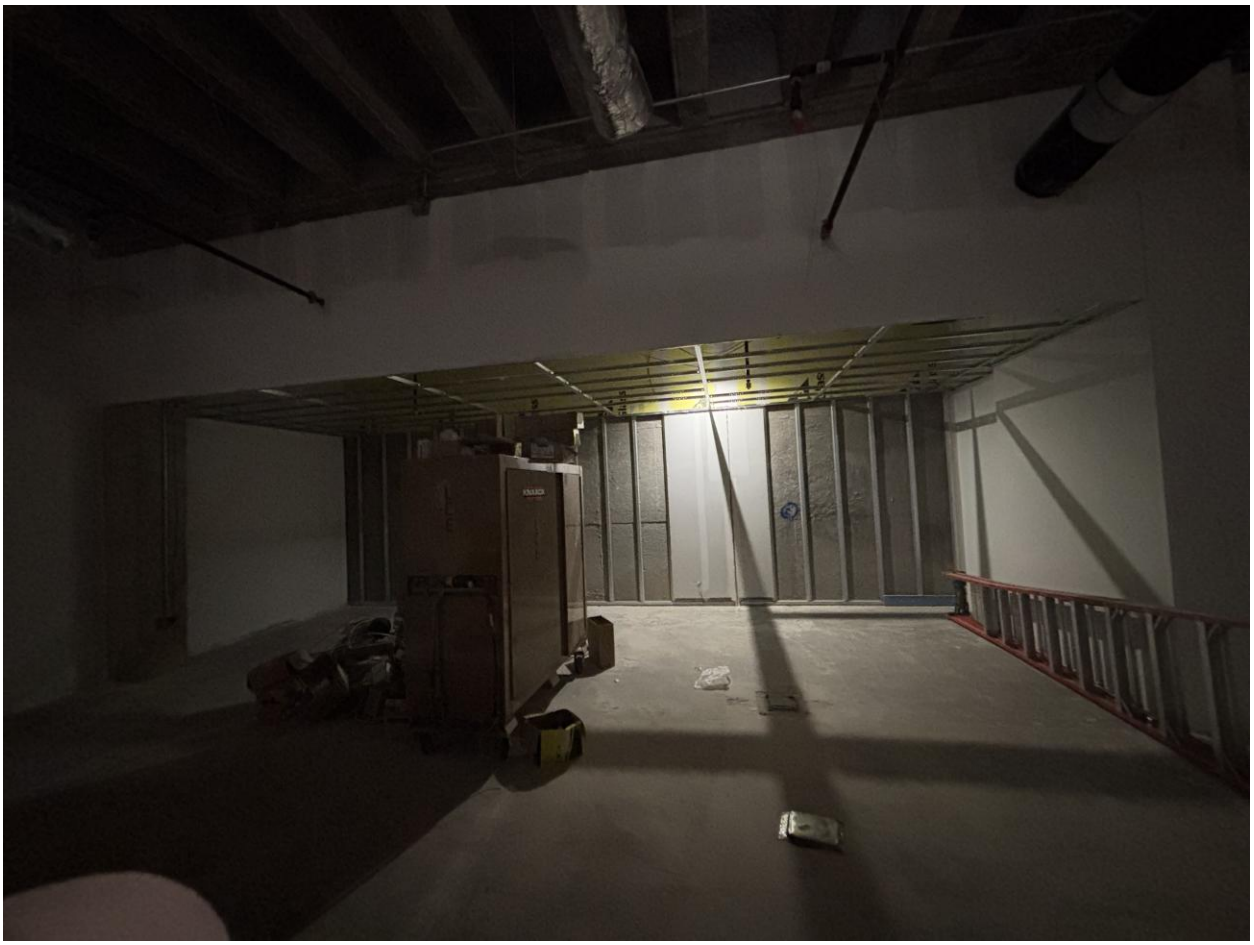

VENTURE
15
3540008600
300

KWIKOOL

Edgeguard
Edgeguard